E/ONE EXTREME SERIES

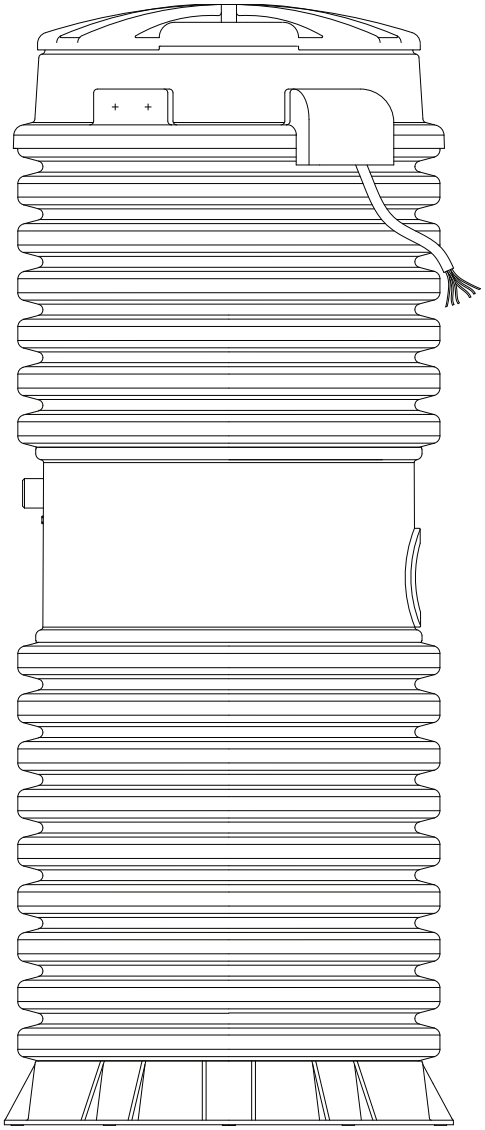

Service Manual

E/One Extreme Grinder Pumps

240V, 60 Hz • Hardwired Controls

Contents

Chapter 1 — Introduction

This manual contains information about servicing, rebuilding and troubleshooting E/One Extreme Series grinder pumps. A thorough understanding of these products will save valuable time when troubleshooting and repairing E/One grinder pumps.

About E/One Model Names

This manual contains information specific to the hardwired model. The flag tag on the pump cable will include “H” for hardwired pumps or “R” for wireless pumps. For manuals for wireless (DR and WR) pumps or explosionproof (DX and WX) pumps, contact your local distributor or E/One Field Service at 518.346.6161 or ssbfieldservice@eone.com.

Each station name is made up several identifiers. For example, the model DH272:

D: D-Series (stations that feature a drywell, or dry accessway)

H: Hardwired level control connection

27: Refers to the number of gallons of capacity; the first two numbers are used

2: Number of pumps installed

Extreme Series Grinder Pump Stations

						
Hardwired	IH091	DH071	DH151	DH152	DH272	DH502
Wireless	N/A	DR071	DR151	DR152	DR272	DR502
						
Hardwired	WH101	WH231	WH471, WH472	WH482, WH483, WH484	Gatorgrinder or W-Series Fiberglass (WH)	
Wireless	WR101	WR231	WR471, WR472	WR482, WH483, WH484	WR; Gatorgrinder is GH only	

Table 1-1

Basic Operation

The grinder pump is designed to grind and pump domestic sewage. The pump is a semi-positive displacement, progressing cavity pump. The grinder pump consists of a pump assembly with an integral sewage grinder and shredder device. The pump traps a column of air in the sensing bell for the on-off pressure switch. When water in the tank reaches the normal turn-on level, the pressure in the sensing line closes the electrical contact points. The relay coil is energized and the relay contact points close, providing electrical power to the pump motor. When the motor starts and runs, the grinder pulverizes any solids. The slurry is then pumped until the liquid in the tank is lowered to the shut-off level. This reduces pressure on the diaphragm of the on-off switch, which opens the electrical contacts and removes power from the motor.

In the event of a pump failure, the liquid in the basin rises and activates an alarm pressure switch. The electrical contacts close, activating the alarm indicator (light and/or buzzer). The alarm alerts the homeowner about a pump problem.

Safety Warnings

A **Caution** statement in this manual designates a situation that could cause equipment failure or damage. Follow the proper safety procedures as described in the instructions.

A **Warning** statement in this manual designates a situation that can cause bodily harm and/or equipment damage. Follow the proper safety procedures as described in the instructions.

Chapter 2 — Troubleshooting

Site information is vital to proper diagnosis of a pump failure and returning the station to operation. When a pump requires service, perform an inspection of the site first.

Site Survey — Alarm Panel

1. Observe the site. Record the following on the service tag:
   - Customer information
   - Date and time
   - Alarm status
   - Is the pump running (without opening the station)?
2. Open the alarm panel enclosure. Record the following on the service tag:
   - Is the inside of the alarm panel dry and free from moisture?
   - Are any breakers tripped?
   - Was the panel installed correctly (penetrations on bottom, sealed conduits, etc.)?
   - Is service needed to the panel?

Figure 2-1, Service Tag

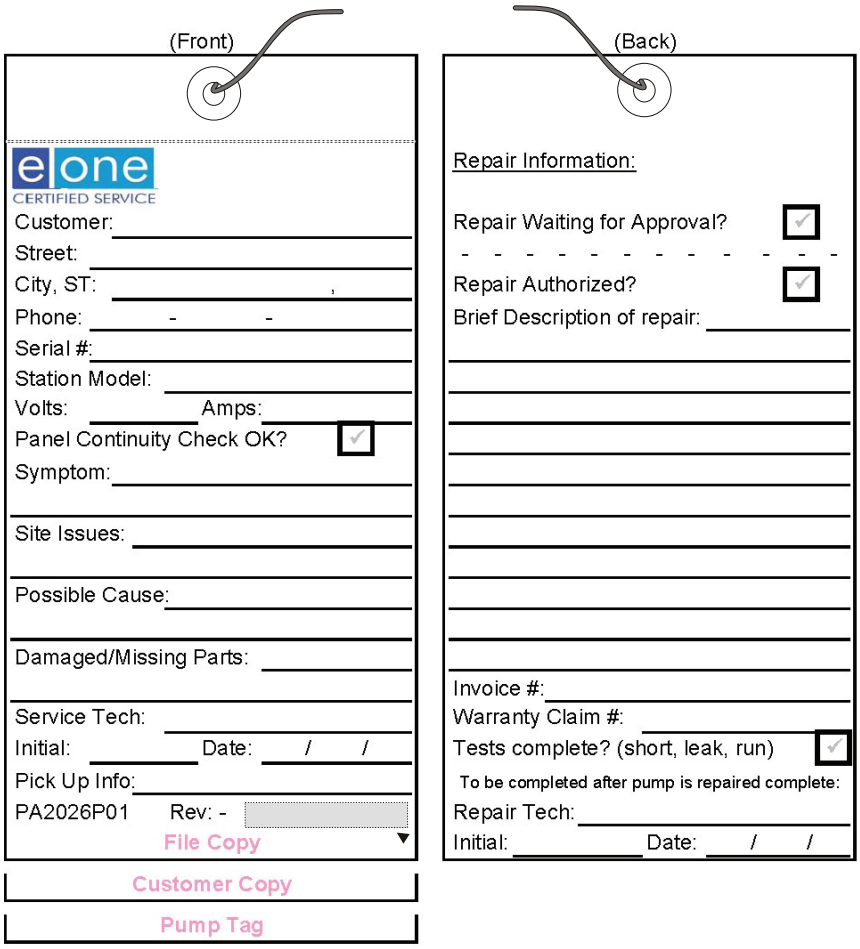

Supply Voltage Checks

The Environment One grinder pump is equipped with a 1725 rpm, 1 hp, multi-tap 120V/240V motor. The operating voltage parameters of the motor are plus or minus 10 percent of the specific application, equating to 108V to 132V in the 120V application and 216V to 264V in the 240V application.

Supply Voltage and Breakers, 240V

Color/Pin #	Color/Pin #	Normal Reading	Operation	If Reading is Wrong, Check:
L1	L2	216V – 264V	Incoming voltage to breaker OK	Breaker tripped or off in main panel; lost leg of power
Red 2	Black 3	216V – 264V	DBL pole breaker OK	Bad breaker; lost leg of power
Neutral	Alarm breaker (incoming)	108V – 132V	Incoming voltage to breaker OK	Breaker tripped or off in main panel; lost leg of power; jumper wire not connected
Neutral	Alarm breaker (pump side)	108V – 132V	Alarm breaker OK	Bad breaker
Neutral	Yellow 5	108V – 132V	Voltage to alarm switch OK	Loose wire between alarm board and single pole breaker; bad alarm board

Table 2–1

Supply Voltage and Breakers, 120V

Color/Pin #	Color/Pin #	Normal Reading	Operation	If Reading is Wrong, Check:
Neutral	L1	108V – 132V	Incoming voltage to breaker OK	Breaker tripped or off in main panel; lost leg of power
Neutral	Red 2	108V – 132V	Breaker OK	Bad breaker; lost leg of power
Neutral	Alarm breaker (incoming)	108V – 132V	Voltage to alarm OK	Breaker tripped or off in main panel; lost leg of power; jumper wire not connected
Neutral	Alarm breaker (pump side)	108V – 132V	Alarm breaker OK	Loose wire between alarm board and alarm breaker; bad alarm board
Neutral	Yellow 5	108V – 132V	Voltage to alarm switch OK	Loose wire between alarm board and single pole breaker; bad alarm board

Table 2–2

Figure 2-2, Phase Charts

1 Phase, 240V
180 Degrees out of Phase

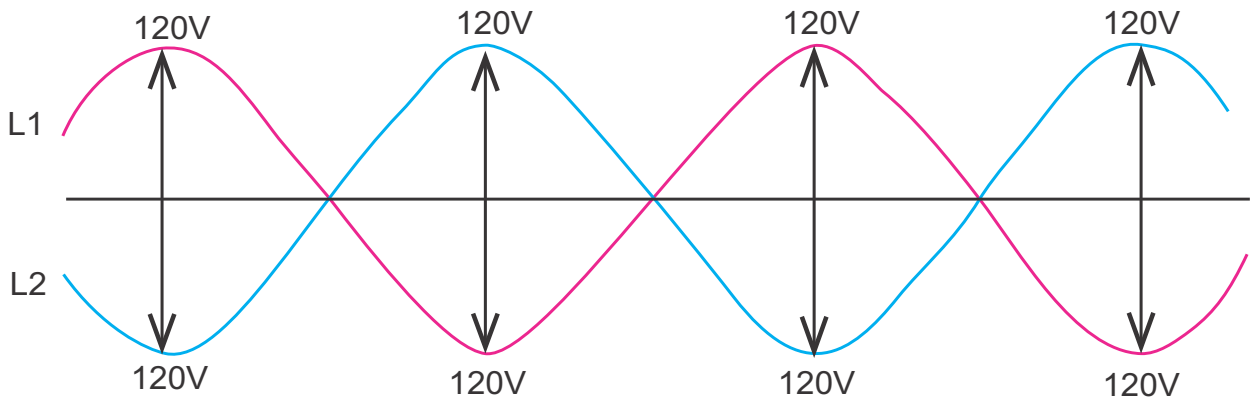

3 Phase, 208V
120 Degrees out of Phase

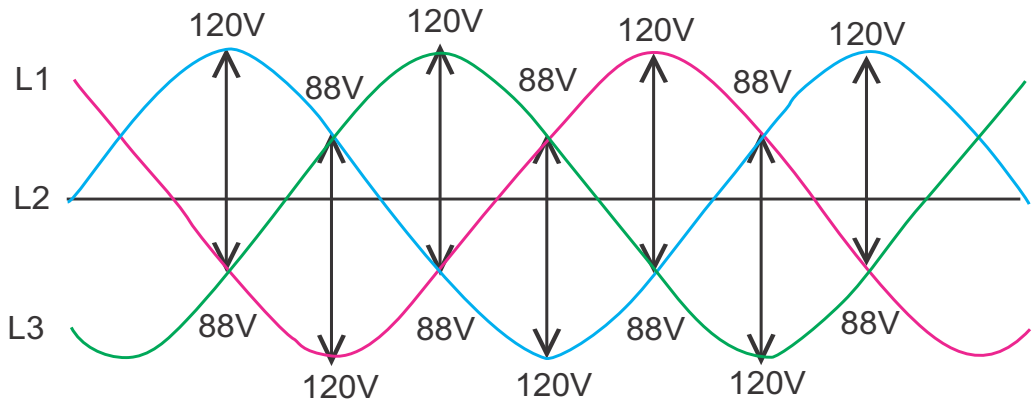

3 Phase, 240V Buck Boost Transformer

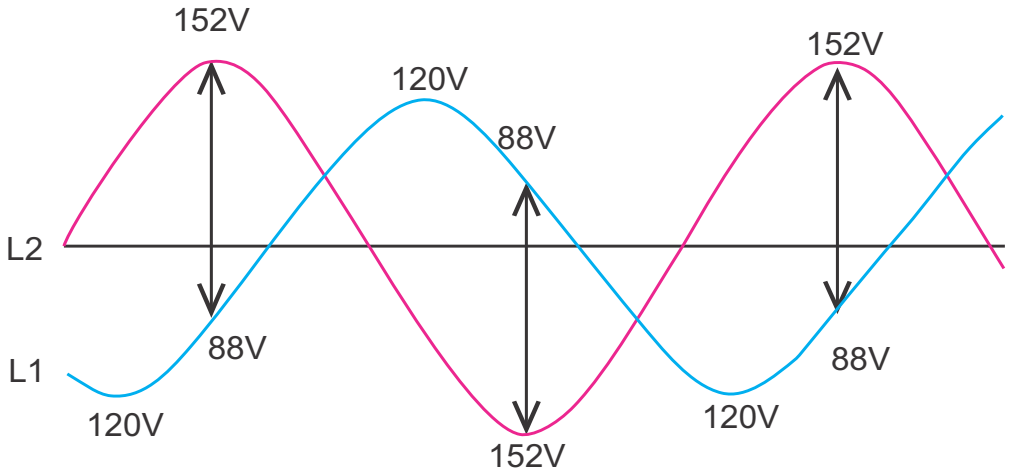

Buck Boost Transformer — 240V Application

If the supply voltage on a 240V application is 208V 3 phase, a buck boost transformer must be installed. Not installing the transformer will shorten the life of the motor significantly.

A buck boost transformer manipulates one leg of the supply voltage. It will raise the one leg approximately 32V (240V – 208V = 32V), which would give approximately 152V on one leg and 120V on the other to equal 240V. This is important to know because one leg of the main supply voltage is shared with the alarm circuit, which is a 120V circuit with an operating range of 108V to 132V.

Connect the higher of the two legs to the pole of the double pole breaker that has the pump L2 (Black) wire tied to it. The pole with the pump L1 (Red) wire is the pole shared with the alarm breaker. Failure to connect the wires in this configuration will result in a high voltage condition on the alarm circuit board, subsequently resulting in failure of the circuits.

Continuity Test

All continuity readings should be taken after the power is turned off and verified with a voltmeter. With the pump power off, set an ohmmeter (Wavetek #5XP or equivalent) to the 2–meg or 2000K ohm scale. All readings for 120V pumps are performed in the 2000K or 2M scale unless indicated otherwise. The meter must be in the 200K scale to read the coil and alarm circuits. Auto-ranging meters must be set manually.

Identify the wires that come from the pump and go to the panel. The test points on Tables 2-3 through 2-6 refer to pump wires only and can be tested at the panel or EQD. Allow at least 5 seconds for the meter to obtain a stable reading. Note any incorrect readings on the service tag.

Note: *Ground to Blue and Ground to Yellow checks are true for two-relay configuration simplex and duplex alarm panels. Four-relay configuration simplex boards, E/One Sentry Protect and E/One Sentry Protect Plus panels will show "open" on these checks in or out of water.*

Megohmmeter/Cable Insulation Integrity Check

1. Separate the EQD at the station and remove all but the ground wire inside the panel.
2. Using a 500V Megohm meter, check for shorts between all wires:

   Good: 500M or higher

   Marginal: Between 200M and 500M

   Bad: Below 200M
3. If a bad reading is detected, isolate the cable by removing the EQD insert and retesting the cable.
4. If the bad reading goes away, replace the insert and retest the wires to ensure that the new EQD insert resolved the problem.

Always retest after repairs. If the readings don't change, replace the cable.

Note: *If moisture is present in the EQD, replace the inserts and clean and dry the housings before reassembly. If housings are flooded, water may have wicked into the wires and trimming back the cable may be necessary. If bad readings persist, replace the cable.*

240V Continuity Checks

This table assumes the pump has shut off on its own or is not installed in a tank.

Color/Pin #	Color/Pin #	Normal Reading	Operation	If Reading is Wrong, Check:
Brown 1	Red 2	OL or Open	On/off switch off	Bad switch; wet EQD; miswired; plugged sensing line; obstructed vent; restricted breather tube
Brown 1	Black 3	0.001	Contactor coil	Bad coil; wet controls
Brown 1	Yellow 5 Blue 6	OL or Open	No short to push-to-run	Supply cable cut; water in EQD or pump controls. Unplug EQD and retest to isolate the shorts.
Green 4	Blue 6	0.00 — Short or closed circuit	Ground to Neutral feedback across alarm circuits	Verify Neutral is good on alarm board; possible bad bulb or relay on board. Jump Yellow to Blue to check relay (pump, buzzer and light should come on).
Green 4	Brown 1 Red 2 Yellow 5	OL or Open	No shorts to Ground	Supply cable cut; water in EQD or pump controls. Unplug EQD and retest to isolate shorts.
Green 4	Black 3	OL or Open	Motor	Water in EQD, controls or motor; motor field shorted to ground
Yellow 5	Blue 6	OL or Open	Alarm switch off	Bad switch; wet EQD; miswired; plugged sensing line; obstructed vent; restricted breather tube

Table 2–3

This table assumes enough water is in the tank to turn on the alarm.

Color/Pin #	Color/Pin #	Normal Reading	Operation	If Reading is Wrong, Check:
Brown 1	Red 2	0.00 — Closed circuit	On/off switch on	Bad switch; wet EQD; miswired; plugged sensing line; obstructed vent; restricted breather tube
Brown 1	Black 3	0.001	Contactor coil	Bad coil; wet controls
Brown 1	Yellow 5 Blue 6	OL or Open	No short to push-to-run	Supply cable cut; water in EQD or pump controls. Unplug EQD and retest to isolate the shorts.
Green 4	Yellow 5 Blue 6	0.00 — Short or closed circuit	Ground to neutral feedback across alarm circuits	Verify Neutral is good on alarm board; possible bad bulb or relay on board. Jump Yellow to Blue to check relay (pump, buzzer and light should come on).
Green 4	Brown 1 Red 2	OL or Open	No shorts to ground	Supply cable cut; water in EQD or pump controls. Unplug EQD and retest to isolate shorts.
Green 4	Black 3	OL or Open	Motor	Water in EQD, controls or motor; motor field shorted to ground
Yellow 5	Blue 6	0.00 — Closed circuit	Alarm switch on	Bad switch; wet EQD; miswired; plugged sensing line; obstructed vent; restricted breather tube

Table 2–4

120V Continuity Checks

This table assumes the pump has shut off on its own or is not installed in a tank.

Color/Pin #	Color/Pin #	Normal Reading	Operation	If Reading is Wrong, Check:
Brown 1	Red 2	OL or Open	On/off switch off	Bad switch; wet EQD; miswired; plugged sensing line; obstructed vent; restricted breather tube
Yellow 5	Blue 6	OL or Open	Alarm switch off	Bad switch; wet EQD; miswired; plugged sensing line; obstructed vent; restricted breather tube
Green 4	Black 3	0.00 — Short	Neutral	Neutral not connected
Green 4	Red 2 Yellow 5	OL or Open	No shorts to ground	Supply cable cut; water in EQD or pump controls. Unplug EQD and retest to isolate shorts.
Green 4	Blue 6	0.1 (200K scale)	Ground to Neutral feedback across alarm relay coil	Verify Neutral is good on alarm board; possible bad bulb or relay on board. Jump Yellow to Blue to check relay (pump, buzzer and light should come on).
Brown 1	Blue 6	0.5 (200K scale)	Redundant run to alarm return	Supply cable cut; water in EQD or pump controls. Unplug EQD and retest to isolate the shorts.
Brown 1	Yellow 5	OL or Open (200K scale)	Redundant run to alarm send	Cut cable; wet EQD or controls; stuck manual run switch
Brown 1	Black 3 Green 4	.400 (200K scale)	Contactor coil	Bad coil; wet controls

Table 2–5

This table assumes enough water is in the tank to turn on the alarm.

Color/Pin #	Color/Pin #	Normal Reading	Operation	If Reading is Wrong, Check:
Brown 1	Red 2	0.00 — Short or closed circuit	On/off switch on	Low water level; wet EQD; EQD unplugged; broken wire; miswired; bad switch; sensing line leak or blockage; blocked vent; restricted breather tube
Yellow 5	Blue 6	0.00 — Short or closed circuit	Alarm switch on	Bad switch; wet EQD; miswired; plugged sensing line; obstructed vent; restricted breather tube
Green 4	Black 3	0.00 — Short	Neutral	Neutral not connected
Green 4	Red 2	OL or Open	No shorts to ground	Supply cable cut; water in EQD or pump controls. Unplug EQD and retest to isolate the shorts.
Green 4	Yellow 5 Blue 6	0.1 (200K scale)	Ground to Neutral feedback across alarm relay coil	Verify neutral is good on alarm board; bad bulb; possible bad relay on board. Jump Yellow to Blue to check relay (buzzer and light should come on).
Brown 1	Yellow 5 Blue 6	0.5 (200K scale)	Redundant run to alarm	Supply cable cut; water in EQD or pump controls. Unplug EQD and retest to isolate the shorts.
Brown 1	Black 3 Green 4	.400 (200K scale)	Contactor coil	Bad coil; wet controls

Table 2–6

Amperage Checks

Using a clamp-on amp meter can be helpful for identifying problems such as a restricted or blocked discharge line, blown stator, or faulty check valve/anti-siphon.

1. Set the clamp-on amp meter to the appropriate scale.
2. Hook the probe around the black power lead in the alarm panel.
3. With the power on, fill the tank until the pump operates, or press the push-to-run switch in the alarm panel.
4. Read the current directly. Refer to the following table for troubleshooting.

The figures shown are averages and should be used for approximation because motors, voltages and amp meters vary. The table displays a comparison of back pressure (psi), flow (gpm), current draw (amperes) and head (feet of water pressure).

Amps @ 240V (120V)	PSI	Head (ft)	GPM	Comments
4.9 (9.8) or less	0	0	0	Worn stator
5.6 (11.2)	10	24	14	Normal
5.8 (11.6)	20	46	13	Normal
6 (12)	30	70	12	Normal
6.2 (12.4)	40	92	11	Normal
6.5 (13)	50	115	10	Normal
6.8 (13.6)	60	138	9	Normal
7.1 (14.2)	70	161	8	Normal
7.4 (14.8)	80	184	7.5	Normal
8+ (16+)	90+	207+	Varies	Plugged discharge line or bad bearings
>15 (>30)	0	0	0	Jammed grinder or shorted motor

Table 2–7

A jammed grinder may trip the circuit breaker or cause the overload protector to cycle. This causes the pump to cycle on and off and eventually results in an alarm condition. A torn or worn out pump stator results in a “runs but does not pump” condition and eventually, as the water rises, causes an alarm. Replace the stator and, if necessary, the rotor.

Site Survey — Tank

1. Open the tank and inspect. Record the following on the service tag:
   - Is the station lid above grade?
   - Is the tank/accessway flooded? If yes, where did the water enter?
   - Was the EQD below water?
   - Is the Equalizer hung properly, as high in the tank as possible?
   - Are other signs of infiltration present?
2. Disconnect and inspect the EQD. Record the following on the service tag:
   - Is the EQD dry?
   - Is the EQD assembled correctly?
3. Repeat the power-off continuity checks at the EQD.

Alarm On — Pump Running but not Pumping

Possible Causes	Troubleshooting Steps
Blocked discharge line, worn stator or leak in pump discharge assembly	Check the amperage. If the amperage is high (8 amps or higher), turn off the pump and check the discharge line for blockage. Confirm that the pump has not been damaged by disconnecting the discharge piping and recycling the fluid in the tank. Turn the pump power on and check the amperage. If the amperage remains high, replace the pump and return the failed pump to shop for possible repair. If amperage returns to normal, clear blockage in discharge line and re-check amperage. If the amperage is low (4.9 amps or less), the pump must be pulled and the stator (and possibly the rotor) replaced, or the leaking discharge line repaired. The cause of the stator and/or rotor failure must be determined and corrected before reinstallation or the pump will fail prematurely again. *Chapter 5 – Pump End* describes how to identify and correct causes of stator and rotor wear.

Table 2–8

Alarm On — Pump not Operating

Possible Causes	Troubleshooting Steps
Incorrect voltage	Check the voltage at a location nearest the pump, such as the junction box or EQD. The correct voltage is listed on the pump nameplate. ***Note:*** *Voltage must be within 10 percent of nameplate voltage (240V: 216V to 264V; 120V: 108V to 132V). 208V requires a buck boost transformer.*
Plugged Equalizer	Check the Equalizer tube and ensure it is not crimped or pinched.
Low fluid level	Check the tank for sufficient fluid to operate the pump. Insufficient fluid may indicate a problem with the alarm wiring, alarm sensing line, or alarm switch. *Chapter 8 – Level Sensor* and *Chapter 9 – Control Cavity* describe the steps for checking the alarm wiring and controls.
Wet or corroded controls	Inspect the electrical controls and replace any wet or corroded controls. See *Chapter 9 – Control Cavity.*
Inoperative control	Test the controls as described in *Chapter 9 – Control Cavity.*

Table 2–9

Alarm Activates Frequently

Possible Causes	Troubleshooting Steps
High flow	The incoming flow is greater than the pump can handle. Infiltration, a sump pump, a hot tub or any other appliance that produces excessive water flow can cause a high flow alarm.
Plugged vent or Equalizer tube	Check the vent and the Equalizer tube. A plugged or partially plugged vent or Equalizer tube will cause the alarm to activate frequently. Replace the Equalizer tube if kinked or damaged.
Level sensor leak	Remove the pump from the tank. Inspect the level sensors for cracks and debris; use level sensor test to check for leaks.
Line blockage or worn stator	Check the amperage. If amperage is high, look for a line blockage. If amperage is low, inspect the stator for excessive wear.
Underground wire damage	Check the tray cable wiring for cuts, breaks and shorts. Use a megohmmeter to check for shorts between each pair of leads. Replace the tray cable if a short is found.

Table 2–10

Noisy Pump

Possible Causes	Troubleshooting Steps
Normal Operation	The pump may be grinding material. Wait a few minutes. If the pump does not quiet down, remove the pump and clean the basin.
Low Voltage	Check the voltage level. The voltage is listed on the pump nameplate. ***Note:*** *Voltage must be within 10 percent of nameplate voltage (240V: 216V to 264V; 120V: 108V to 132V). 208V requires a buck boost transformer.*
Blocked Discharge	Check the amperage. If amperage is high (8 amps or higher on 240V; 16 amps or higher on 120V), turn off the pump and check the discharge line for a blockage. Confirm that the pump has not been damaged by disconnecting the discharge piping and recycling the fluid in the tank. Turn on the pump power and check the amperage. If amperage remains high, replace the pump and return the failed pump to shop for possible motor repair. If amperage returns to normal, clear discharge and recheck.
Damaged Stator	Check the stator for holes or tears. *Chapter 5 – Pump End* describes the pump stator inspection procedure.
Worn Motor Bearing	Remove the pump stator and hand-rotate the shaft. If the shaft turns roughly, replace the pump. Return the failed pump to the shop and replace the motor bearings as described in *Chapter 10 – Motor Cavity.*

Table 2–11

Figure 2-3a, Wiring Schematic, 240V, May 2015 & Later (Serial Number 531884)

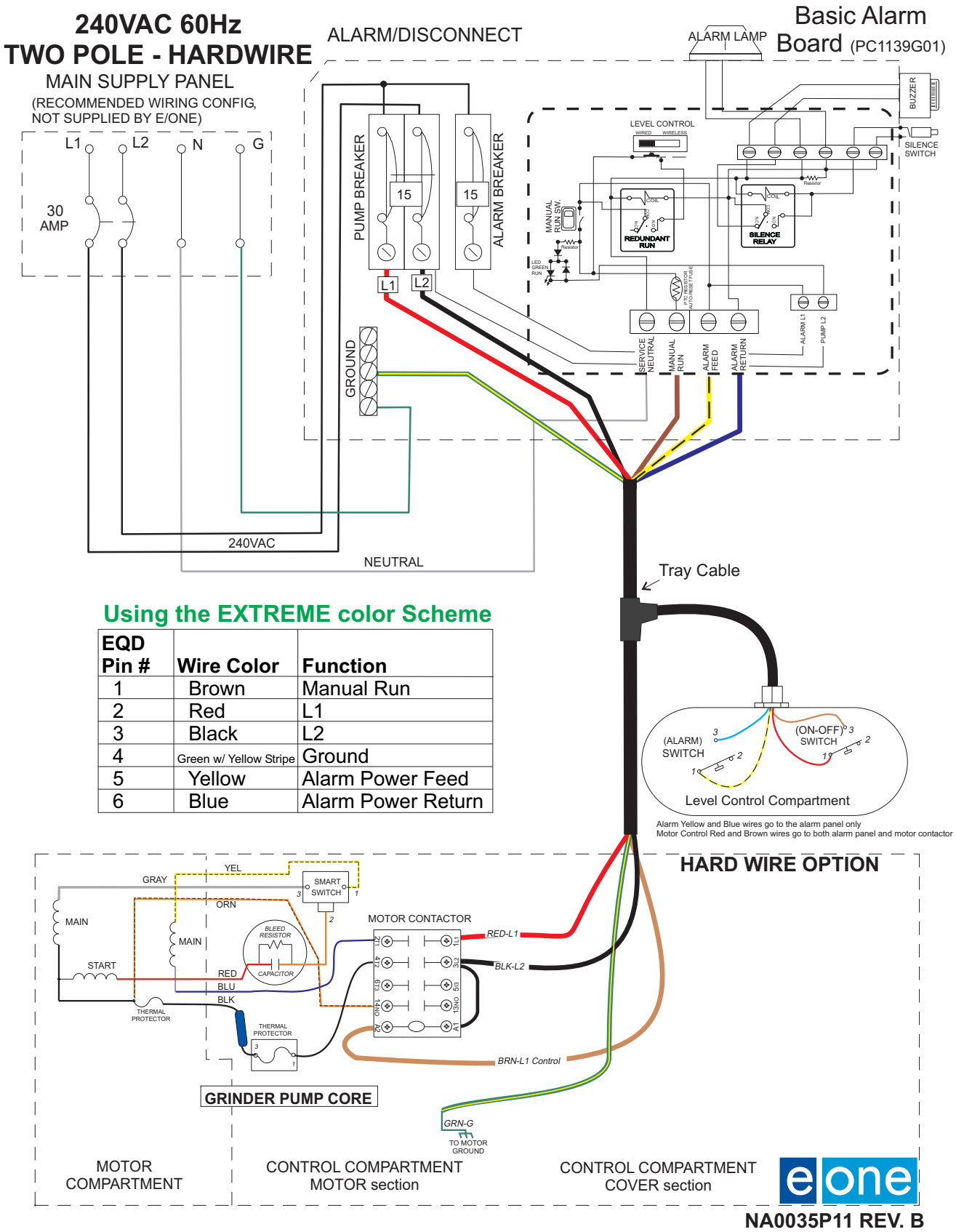

Using the EXTREME color Scheme

EQD Pin #	Wire Color	Function
1	Brown	Manual Run
2	Red	L1
3	Black	L2
4	Green w/ Yellow Stripe	Ground
5	Yellow	Alarm Power Feed
6	Blue	Alarm Power Return

Figure 2-3b, Wiring Schematic, 120V, May 2015 & Later (Serial Number 531884)

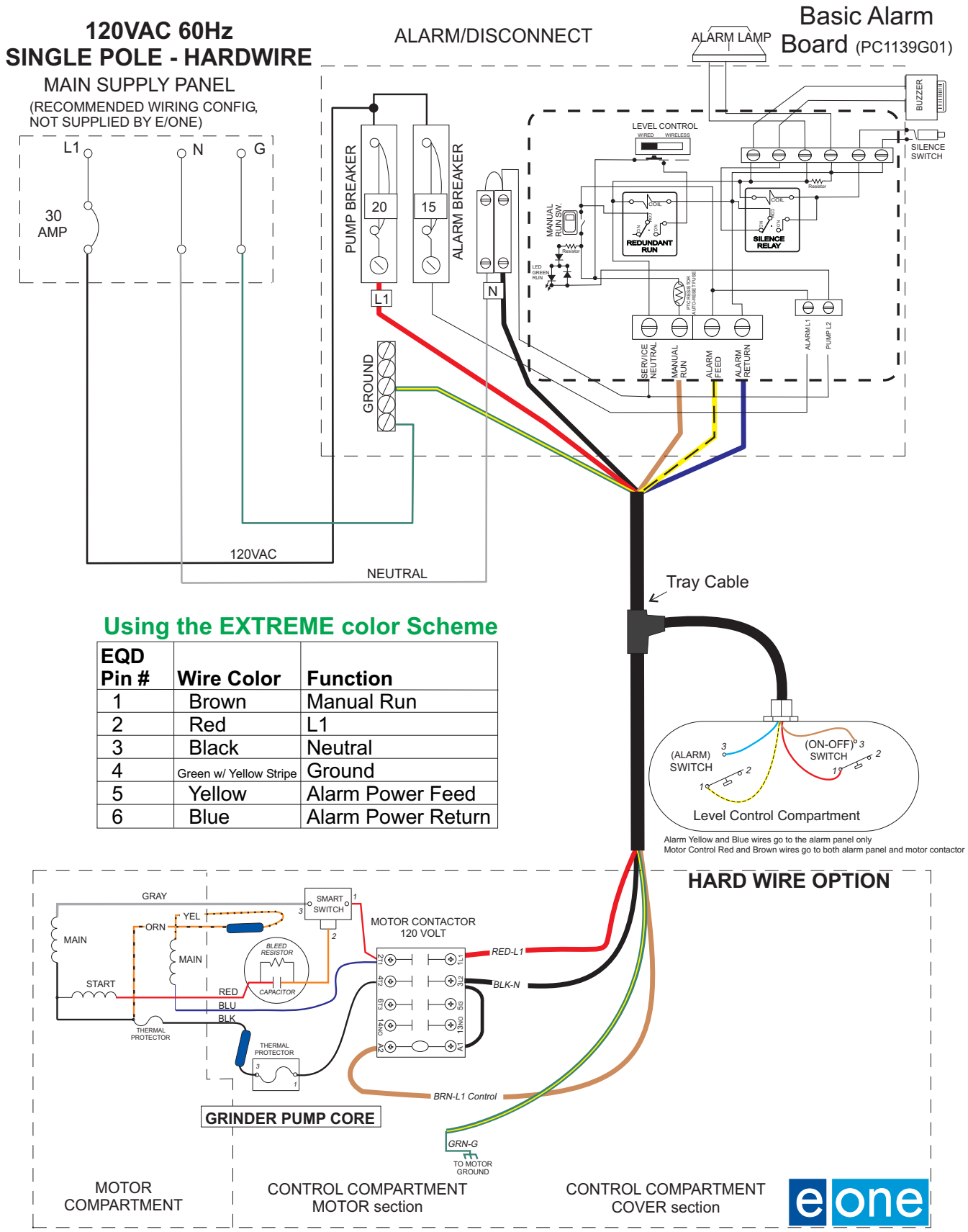

EQD Pin #	Wire Color	Function
1	Brown	Manual Run
2	Red	L1
3	Black	Neutral
4	Green w/ Yellow Stripe	Ground
5	Yellow	Alarm Power Feed
6	Blue	Alarm Power Return

Figure 2-4a, Wiring Schematic, 240V, May 2015 & Earlier (Serial Number 531883)

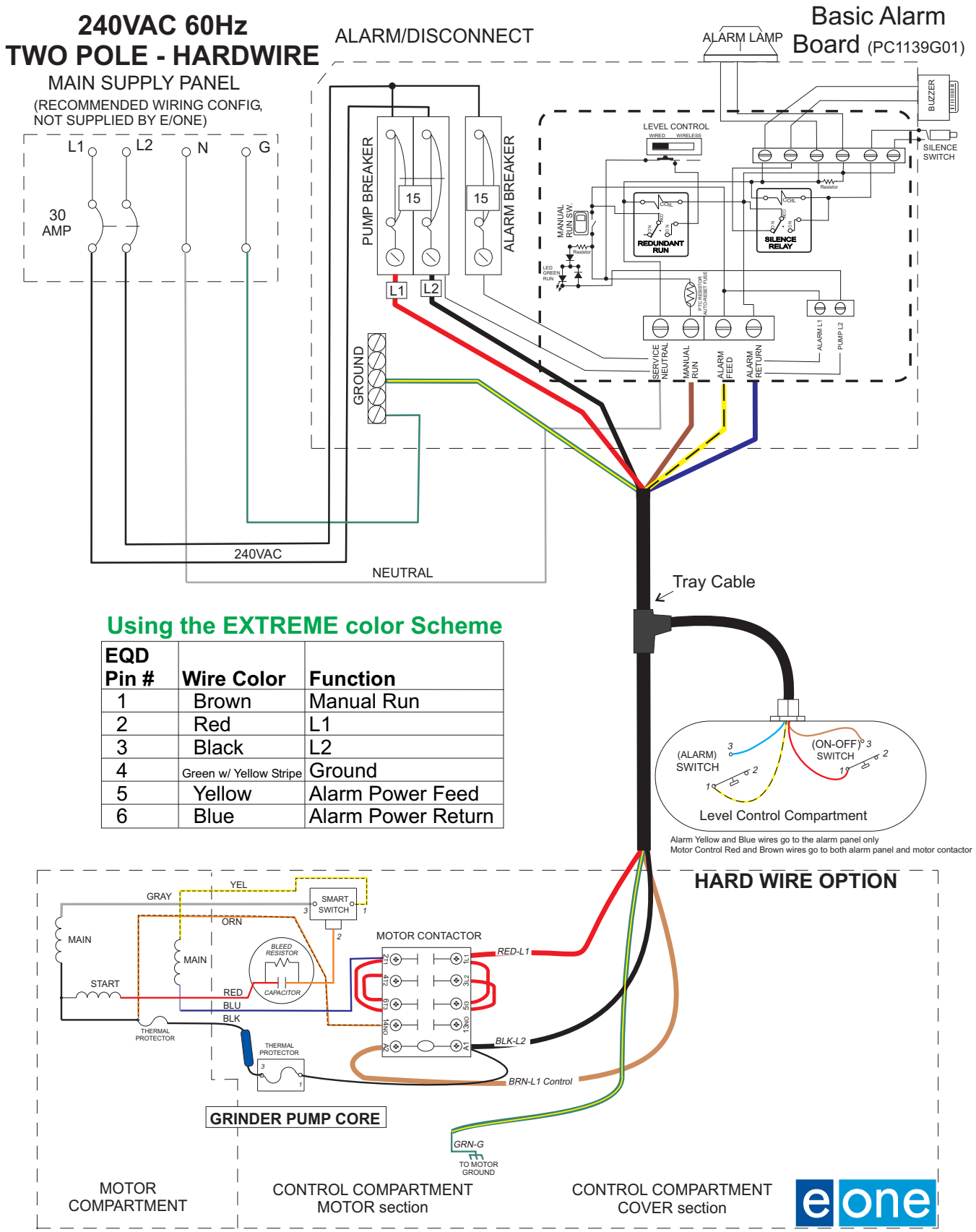

EQD Pin #	Wire Color	Function
1	Brown	Manual Run
2	Red	L1
3	Black	L2
4	Green w/ Yellow Stripe	Ground
5	Yellow	Alarm Power Feed
6	Blue	Alarm Power Return

Figure 2-4b, Wiring Schematic, 120V, May 2015 & Earlier (Serial Number 531883)

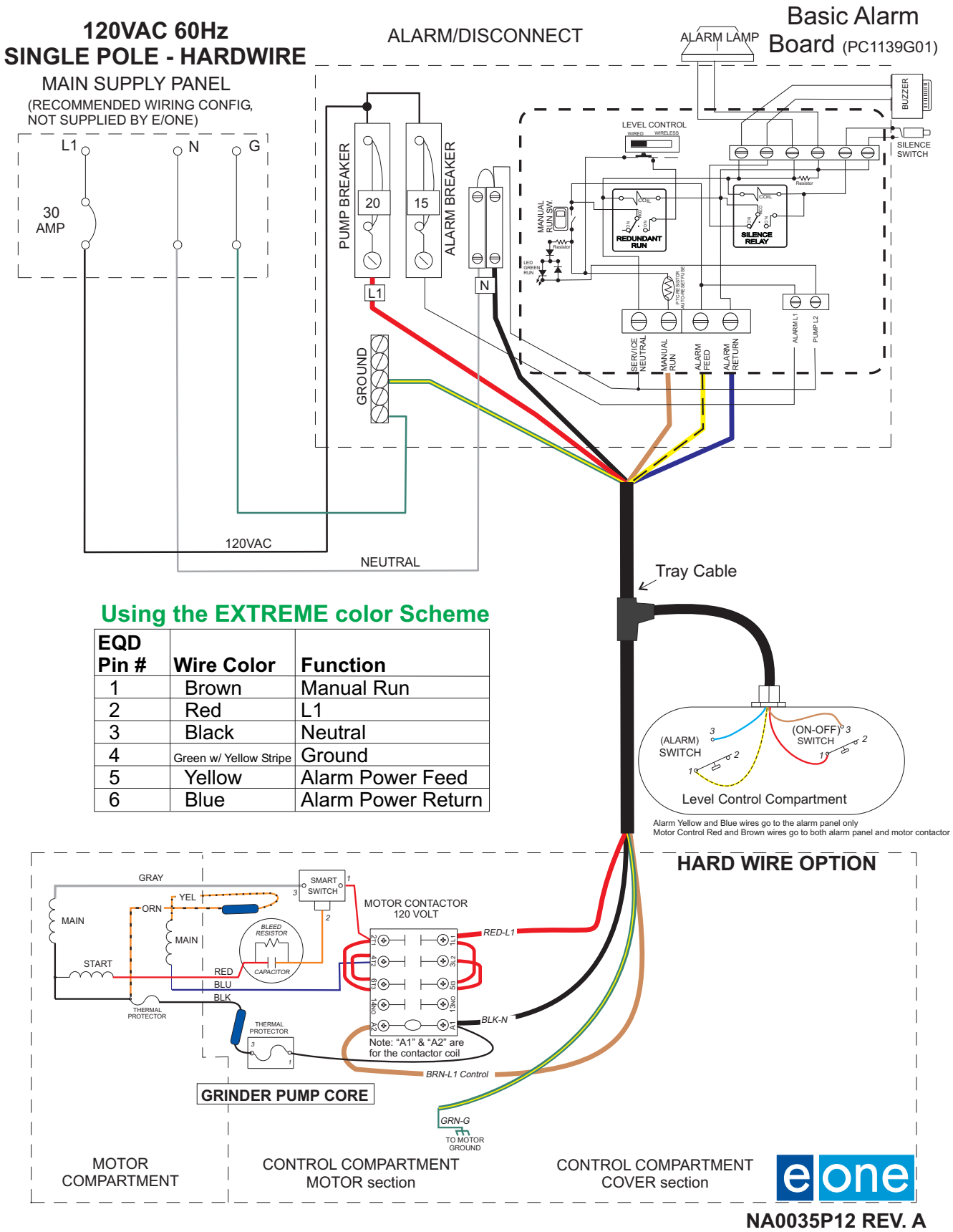

Using the EXTREME color Scheme

EQD Pin #	Wire Color	Function
1	Brown	Manual Run
2	Red	L1
3	Black	Neutral
4	Green w/ Yellow Stripe	Ground
5	Yellow	Alarm Power Feed
6	Blue	Alarm Power Return

Chapter 3 — Pump Removal and Replacement

The procedure for removing and replacing the pump is different for D-Series, W-Series and IH stations. Refer to the following instructions for each model.

D-Series Stations

1. Open the alarm panel and shut off all power to the pump and the alarm system.
2. Remove the station lid.
3. Disconnect the EQD. If the tray cable side of the EQD is wet or shows evidence of moisture, the EQD insert must be replaced. Determine the source of the moisture and correct the problem before connecting a new pump to the EQD.
4. Use the core wrench to close the stainless steel ball valve. Insert the bent end of the core wrench into the hole on the handle of the valve and push down until the handle is horizontal.
5. Use the core wrench to turn the bolt in the middle of the top housing 1/3 turn counterclockwise to release the holding tabs.

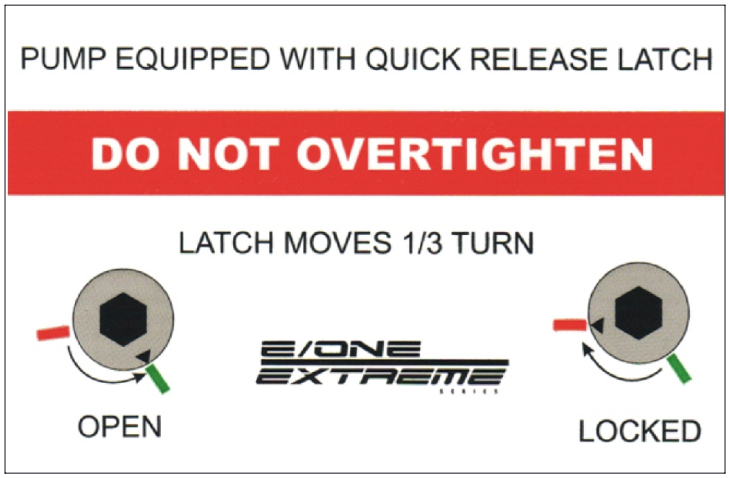

Figure 3-1

6. Use the yellow ropes attached to the pump to pull the pump out of the station; the pump weighs approximately 120 lbs. ***Note:*** *DO NOT pull the pump out of the station by the discharge tube, Equalizer tube or power cable.*
7. Lower the new pump into the tank.
8. Use the core wrench to turn the bolt in the middle of the top housing 1/3 clockwise to engage the holding tabs.
9. Use the core wrench to open the valve.
10. Perform start-up procedures as described in *Chapter 4 — Start-Up Procedure*.

W-Series and Upgrade Stations

1. Open the alarm panel and shut off all power going to the pump and alarm system.
2. Remove the station lid.
3. Disconnect the EQD. If the tray cable side of the EQD is wet or shows evidence of moisture, the EQD insert must be replaced. Determine the source of the moisture and correct the problem before connecting a new pump to the EQD.
4. If the unit is equipped with a slide face valve, close the discharge by lifting up on the handle. Pull the slide face with the discharge hose connected to the pump out of the discharge assembly; use a long piece of PVC pipe with a 1-inch female threaded coupling on the end.

   If the unit is equipped with a ball valve, close the valve and loosen the compression nut on the discharge hose.
5. Use the yellow ropes attached to the pump to pull the pump out of the station; the pump weighs approximately 120 lbs. ***Note:*** *DO NOT pull the pump out of the station by the discharge tube, Equalizer tube or power cable.*
6. Lower the new pump into the tank.
7. Connect the discharge hose to the valve and open the valve.
8. Perform start-up procedures as described in *Chapter 4 — Start-Up Procedure.*

IH Station (Indoor Unit)

1. Open the alarm panel and shut off all power going to the pump and the alarm system.
2. Push the handle down on the inlet pipe gate valve and close the valve.
3. Close the discharge ball valve.
4. Loosen the compression nut on the single union ball valve. Take care not to lose the O-ring; otherwise, the ball valve will hold the pump in place.
5. Remove the eight bolts that secure the pump to the tank.
6. Lift the pump out of the tank; the pump weighs approximately 120 lbs. ***Note:*** *DO NOT pull the pump out of the station by the discharge tube, Equalizer tube or power cable.*
7. Install the new pump into the tank; use a new gasket.
8. Secure the pump with the eight bolts.
9. Connect the single union ball valve. Ensure that the O-ring is in place before securing the compression nut. **Take care not to over tighten the compression nut!**
10. Open all valves and perform start-up procedures as described in *Chapter 4 — Start-Up Procedure.*

Chapter 4 — Start-Up Procedure

Station Inspection

Inspect the following:

1. Proper burial depth (1 to 4 inches below the hinged cover/transition joint).
2. The ground must be graded to prevent water from pooling around the station.
3. Free from damage and leaks.
4. The Equalizer tube/power cable must be hung at the top of the station and not lay on the pump or in wastewater.
5. Electrical shroud must be attached.
6. The tray cable must not be exposed outside the tank.
7. Ensure the discharge valve in the station is open.
8. Ensure that the supply cable connector beneath the cover shroud is tightened securely.

Alarm Panel Inspection

Inspect the following:

1. Proper wiring. Refer to the wiring diagram inside the panel door.
2. Free from damage.
3. Unshielded wires must not be exposed outside of panel.
4. Conduits must be sealed.
5. Test incoming line voltage. If the voltage varies more than 10 percent of the nameplate voltage, do not continue. Rectify the voltage problem.

Voltage, Continuity and Cable Insulation Integrity Tests

Refer to *Chapter 2 – Troubleshooting* to perform these tests. Read all meter instructions for safety information, scale setting, and proper operational procedures.

WARNING!

Always perform continuity checks with the power off!
Use your volt meter to ensure no power is applied
to the pump circuits.

Take test points in the alarm panel. The colors listed in Tables 2-3 through 2-6 are the leads coming from the station and connect in the panel. Using the tables, perform the checks to ensure appropriate readings.

The values listed are average numbers. Allow the meter at least 5 seconds to obtain a correct reading. The meter may give a false reading while bleeding off to an open circuit. This is the impedance of the wire bleeding off and is expected.

If the tests do not pass, unplug the EQD in tank. Repeat the test at the alarm panel, then at the pump EQD. The EQD pin numbers are listed with the corresponding wire colors in the tables. This will help pinpoint where a problem is located.

Note: *Green 4 to Yellow 5 and Blue 6 must show Infinity or open line when testing at the pins in the pump EQD.*

Run Test

This test assumes that the station has enough water to operate the alarm and that all discharge lines and valves are open. Note any problems found during start-up on the start-up sheet. This includes problems that are repaired during start-up. When a problem is repaired, note the date, type of repair and technician.

1. Test the voltage going to the pump at the alarm panel; voltage must be within 10 percent of the nameplate voltage (240V = 216V to 264V and 120V = 108V to 132V). If it is not, do not continue. Rectify the voltage problem.
2. Turn on the alarm breaker and verify that the alarm is activated.
3. Silence the horn.
4. Clip the amp meter onto the black wire of the tray cable.
5. Turn on the pump breaker.
6. Amperage should be between 5 and 8 amps at 240V (10 and 16 amps for 120V pumps). Higher amperage indicates higher pressure. Greater than 8 amps at 240V (or 16 amps at 120V) could indicate a plugged or closed line. If you experience a high amperage reading, shut off the pump immediately and rectify the problem.
7. Once the alarm turns off, the pump will run for about 1 minute depending upon the size of the tank.
8. After the pump turns off, turn off the power to pump and the alarm.
9. Perform the out of water or pumped down continuity checks.

Chapter 5 — Pump End

Removing the Pump Stator

1. Remove the retaining clips from the bottom of the level sensor.
2. Lay the pump core on its side. Support the motor head on a 4x4 wooden block.
3. On W-Series, Gatorgrinder and Upgrade pumps, remove the wire stand from the pump. There is a hole in the suction housing where a 1/8-inch punch can be used in to aid the removal of the wire stand.

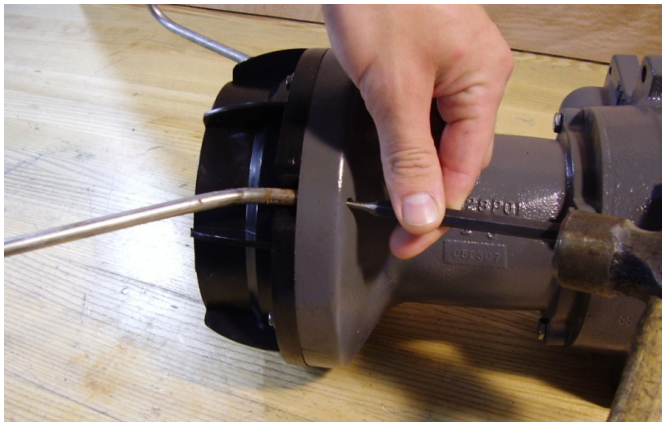

Figure 5-1

4. Use a 5/16” nut driver to remove the four inlet shroud retaining screws and pull the inlet shroud off of the shredder ring.

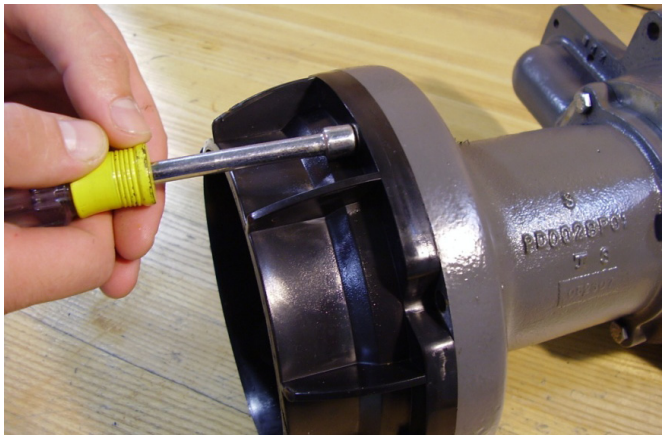

Figure 5-2

5. Remove the shredder ring by gripping it with a pair of vice grips. Strike the vice grips with a hammer while pulling straight out from the pump. Replace the shredder ring if it is cracked, broken or worn.

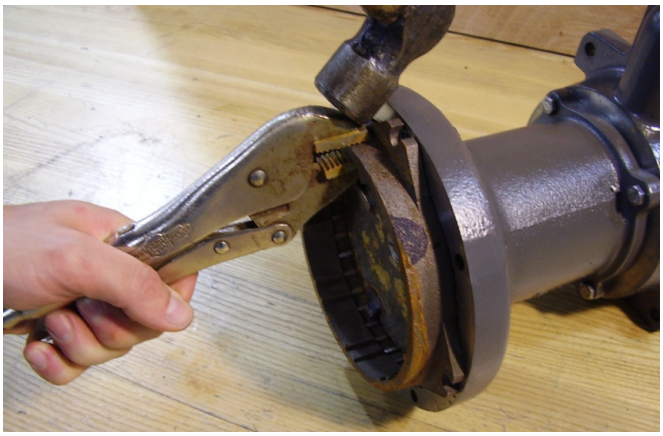

Figure 5-3

6. Remove the cutter wheel by placing a plastic mallet, punch or drift on one of the paddles and striking the mallet, punch or drift with another hammer. Repeat until the cutter wheel spins free. The cutter wheel is threaded onto the armature shaft with a conventional right hand thread. If the cutter wheel is difficult to loosen, apply penetrating oil and let it soak for a few minutes. Never strike the cutter bars with a metal hammer or punch. Replace the cutter wheel if it is worn out of round. If more than 1/32-inch is rounded off of the edge of the cutter bars, replace the cutter wheel.

Figure 5-4

7. Remove the four bolts (7/16-inch wrench or socket) that secure the suction housing to the motor head and remove the suction housing.

Figure 5-5

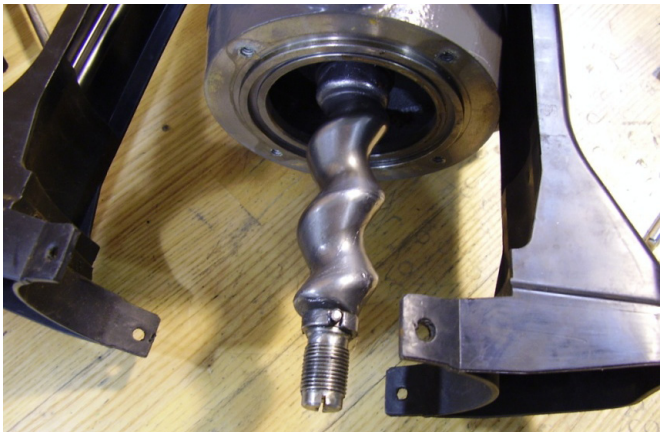

Figure 5-6

8. Slide the stator and liner off of the rotor. The liner may be inside of the suction housing. The liner must be removed and replaced when the stator is replaced. The liner protects the stator from wearing against the suction housing.
9. Inspect the stator for wear. The next section describes types and causes of wear. Determining the cause of wear is important or the pump will fail again. The average life of a stator is eight to 10 years.

Pump Stator Inspection

Three types of stator wear can cause pump failure: a tear or hole in the stator, worn lobes or a swollen stator. Each type of stator wear is described below.

Tear/Hole in the Pump Stator

A hole or tear in the stator is caused by a blockage in the discharge line. If the pump runs for a long period of time against a blocked line, the high pressure (approximately 150 psi) in the pump cavity will rupture or tear the stator.

The blockage must be cleared before the pump is put back into service. Check the discharge line for a plugged line, closed valve, frozen valve or bad check valve/anti-siphon.

Worn Lobes

Examine the lobed area in the center of the stator. Normally, the rubber lobes are rounded at the high points; worn lobes are flattened at the high points. On flattened lobes, the texture of the worn rubber is either smooth or rough.

Stator lobes that have worn rough display one or more of the following characteristics:

- Wear looks rough and loose pieces of rubber hang from the lobes
- Rubber is stuck in the lower valley between the lobes
- Rubber is soft or has hard spots on it
- Worn lobes display surface cracks that resemble weather-checking on an old tire
- Rotor has rubber stuck to it

Lobes Worn Smooth. Old age is the most common reason for smooth wear. The average life of a stator operating in a single-family home (300 gpd) is about 10 years. Higher incoming flows will shorten the life of the stator. If two homes are on the same station, the stator will last about five years. However, if the stator has worn prematurely (less than six years for a single-family home), abrasives cause the wear.

Look into the void between the inner skirt and the outer bore of stator. Check for an accumulation of more than 1/8 inch of any of these types of materials: sand, goldfish stones, gravel, kitty litter, glass, etc.

Determine and eliminate the source of the abrasives or the stator will fail prematurely. Check for infiltration from a broken line, a sump or even a roof drain. Additionally, ensure that the homeowner is not introducing the abrasive materials through a toilet or sink.

Lobes Worn Rough. A pump that has run dry is the most common reason for lobes that have worn rough. To determine the cause of a pump running dry:

1. Check to see if the Equalizer tube is plugged.
2. Check the tank vent. Ensure the vent is clear and installed properly.
3. Check the sensing line to ensure it is clear. Visually inspect the sensing line for blockage.
4. Check for an obstruction at the suction end of the pump (inlet shroud). An obstruction will restrict the flow. Check for objects such as a board, junction box cover, heavy glove or plate.
5. Inspect and troubleshoot the electrical controls. Refer to *Chapter 9 – Control Cavity*.
6. Check the push-to-run/redundant run circuit. Check the push-to-run circuit for all units with this feature.
7. Check for shorts in the panel, tray cable, EQD and control compartment. Two wires touching, corrosion or water can cause shorts. Refer to *Chapter 2 – Troubleshooting*.

Swollen Pump Stator

Petroleum-based products such as paint thinner, photo-developing chemicals, gas, oil, brake fluid, transmission fluid, etc. will cause a swollen pump stator; introduction of these types of products into the system must be eliminated or the problem will reoccur. The pump stator is made of EPDM material, which absorbs petroleum the way a sponge absorbs water. If the pump stator appears to have no wear but will not pump liquid, compare it to a new stator. Slide the old stator over the pump rotor and remove it. Slide the new stator over the rotor and remove it. If the new stator fits tighter or if the old stator appears larger than the new one, the pump stator needs to be replaced.

Note: *Never intentionally introduce petroleum based-products to a public sewer system. If they are present, contact your local distributor and ask for an oil-resistant stator, service PT# 8005. This stator is not recommended for normal residential conditions because of reduce life expectancy (average of 2 to 3 years).*

Inspecting a Pump Rotor

The pump rotor has a life expectancy of about 15 years. Besides age, the following can cause rotor wear:

- High flow (business, industry or infiltration)
- Abrasives
- Pump running dry

The rotor does not have to be removed from the motor shaft for inspection. When inspecting the rotor, do not worry about scratches, lines, casting marks or pit marks. Check the high, rounded lobes that spiral the length of the rotor. If the lobes have been worn flat into a 1/4-inch or wider band, the rotor is worn and must be replaced.

Rubber found on the rotor indicates that the pump has run dry. Rubber can be cleaned with acetone, paint thinner or other petroleum cleaner. Inspect the rotor for excessive wear and replace it if necessary. If unsure, replace the stator and liner and perform a flow check. Flow should read about 14 gpm at 15 psi. Run the pump allowing the discharge to flow into a 5 gallon bucket. Filling the bucket at 15 psi should take about 23 seconds.

Worn **New** **Rubber (Run Dry)**

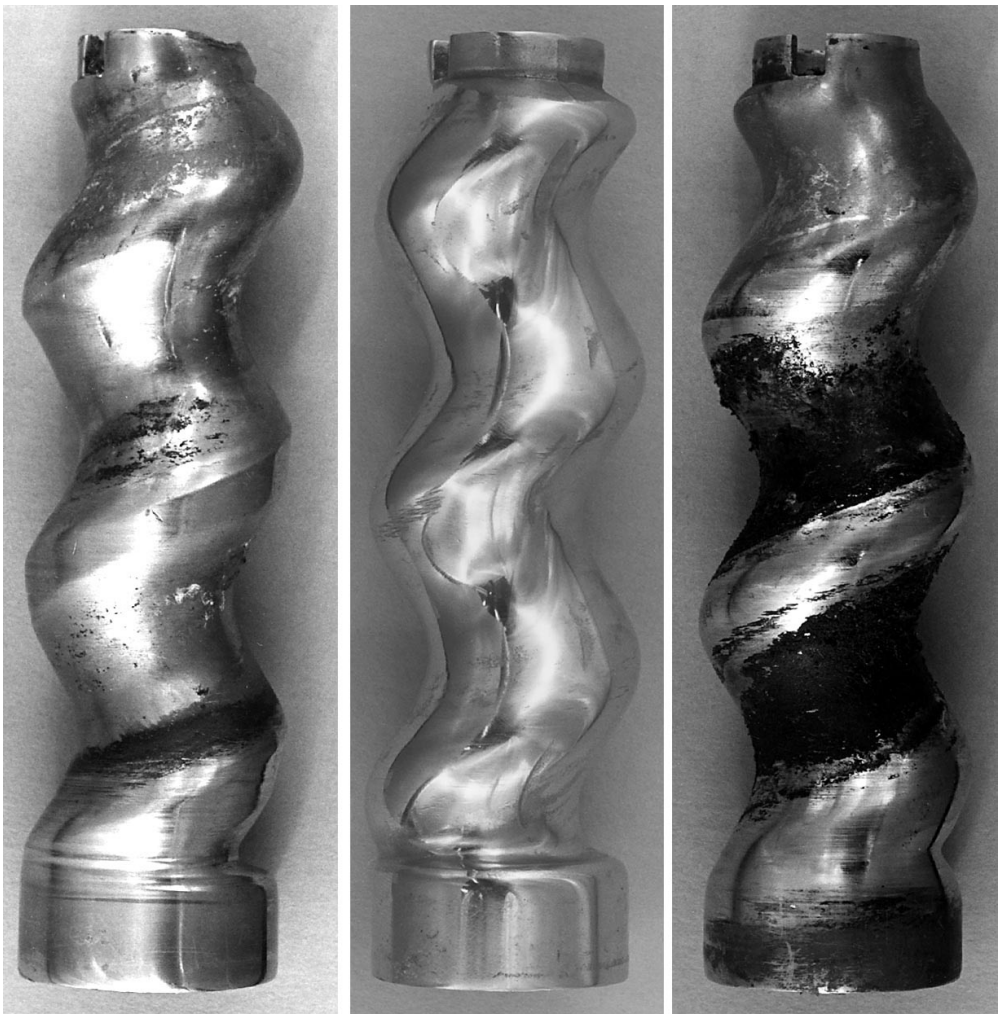

Removing the Pump Rotor

1. Support the end of the motor shaft with a wooden block.
2. Use a hammer and a 1/8-inch punch to remove the groove pin that retains the pump rotor.

Figure 5-8

3. Slide the rotor off of the shaft. If the rotor sticks, use a plastic mallet to tap the end of the rotor until it comes off. Take care not to bend the armature shaft.

Note: *Do not disturb the mechanical seal. String-like fibers and other debris around the seal are normal. If the seal bellows is moved on the shaft, it will create a leak path and flood the motor cavity. The mechanical seal should only be replaced at a repair shop and only during a total overhaul of the pump motor.*

Assembling the Pump/Grinder Mechanism

1. If the rotor was removed, slide the rotor over the armature shaft, compressing the seal spring. The spring washer may need to be aligned with the shoulder of the armature shaft. Press the groove pin into place with channel lock pliers. Lubricating the groove pin will help to ease the installation. Do not use a hammer to beat in groove pin; doing so may bend the armature shaft.
2. Install the new pump stator and liner over the rotor. The rotor or internal bore of the stator should be lubricated with a small amount of silicone grease; most new stators are lubricated at the factory. Ensure the lip of the stator is uniformly seated in the motor head groove.
3. If not already done, remove the old pump liner from suction housing.
4. Install the suction housing. Tighten the bolts diagonally to maintain housing alignment with the armature shaft. Failure to align properly will cause the cutter wheel to hit the shredder ring.
5. Apply a small amount of Anti-Seize to the threads of the armature shaft and hand-tighten the cutter wheel onto the shaft. Do not overtighten the cutter wheel; it will be difficult to remove the next time the unit is serviced.
6. Seat the shredder ring in the suction housing, ensuring that the four notched ears are properly aligned with the four threaded holes. Set with a rubber mallet or hammer and a block of wood. Do not strike the shredder ring with a steel hammer. Start with

one side, maintain pressure, and drive the opposite side into place. Ensure the shredder ring is seated all the way around.

7. Rotate the cutter wheel to ensure it does not interfere with the shredder ring.
8. Install the inlet shroud. Tighten the four screws diagonally
9. Reinstall the core. Open all the valves on the discharge plumbing before turning on the power. Verify that the voltage and amperage readings are correct.

CAUTION

Be sure to open all valves on the discharge plumbing before turning on the power.

Figure 5-9a, D-Series Pump, Exploded View

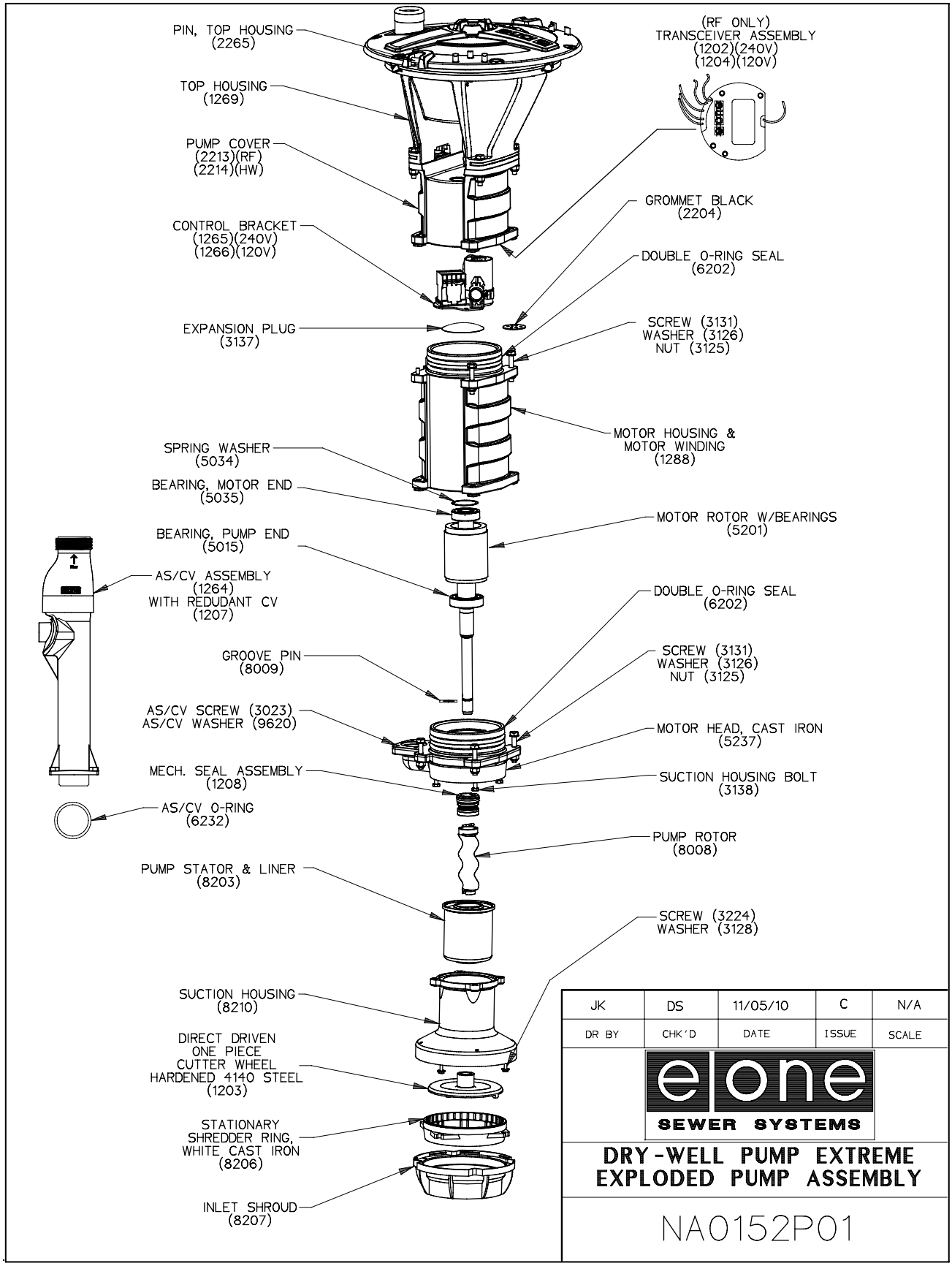

Figure 5-9b, W-Series Pump, Exploded View

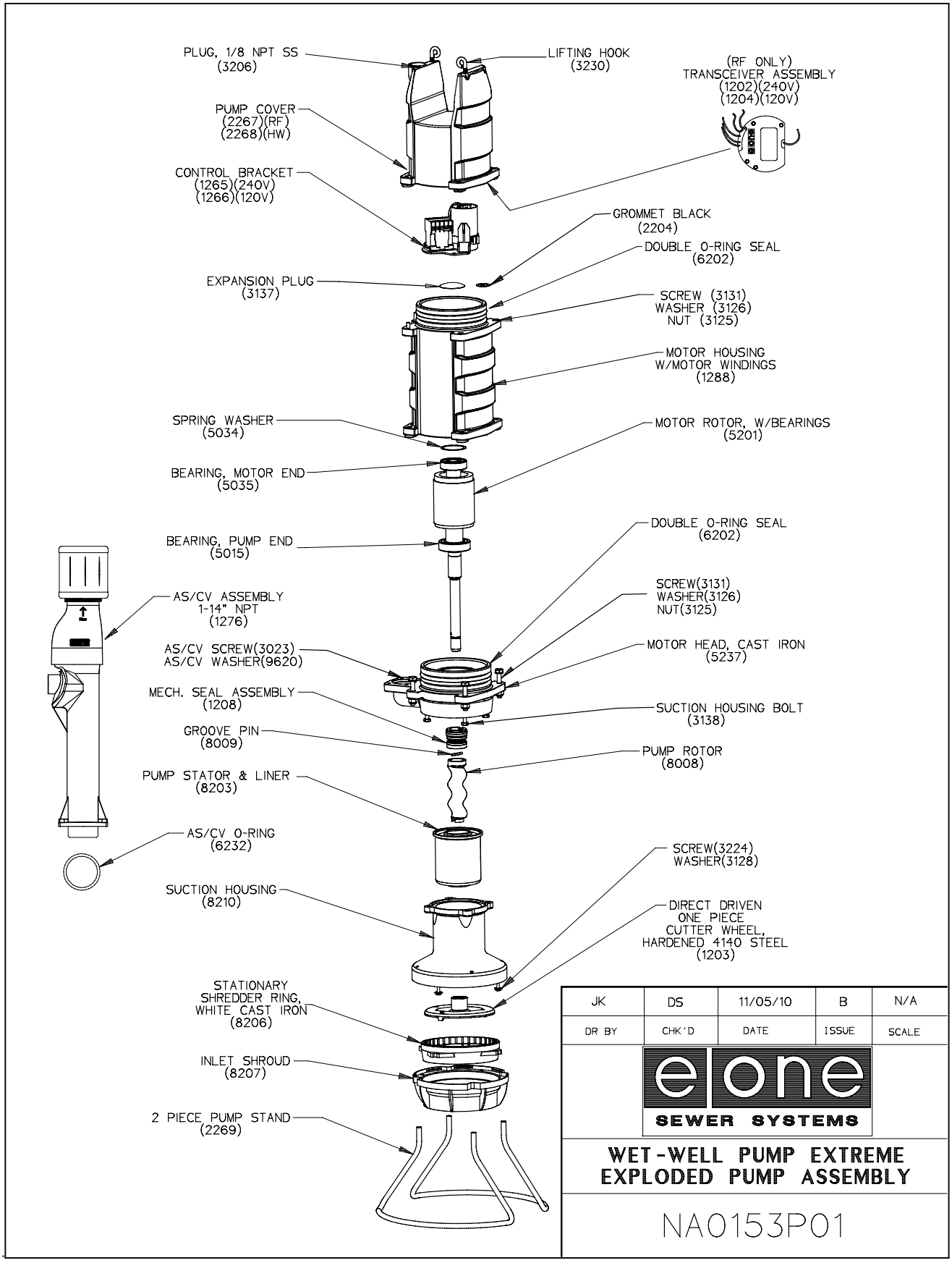

Figure 5-9c, Gatorgrinder (GH Series) Pump, Exploded View

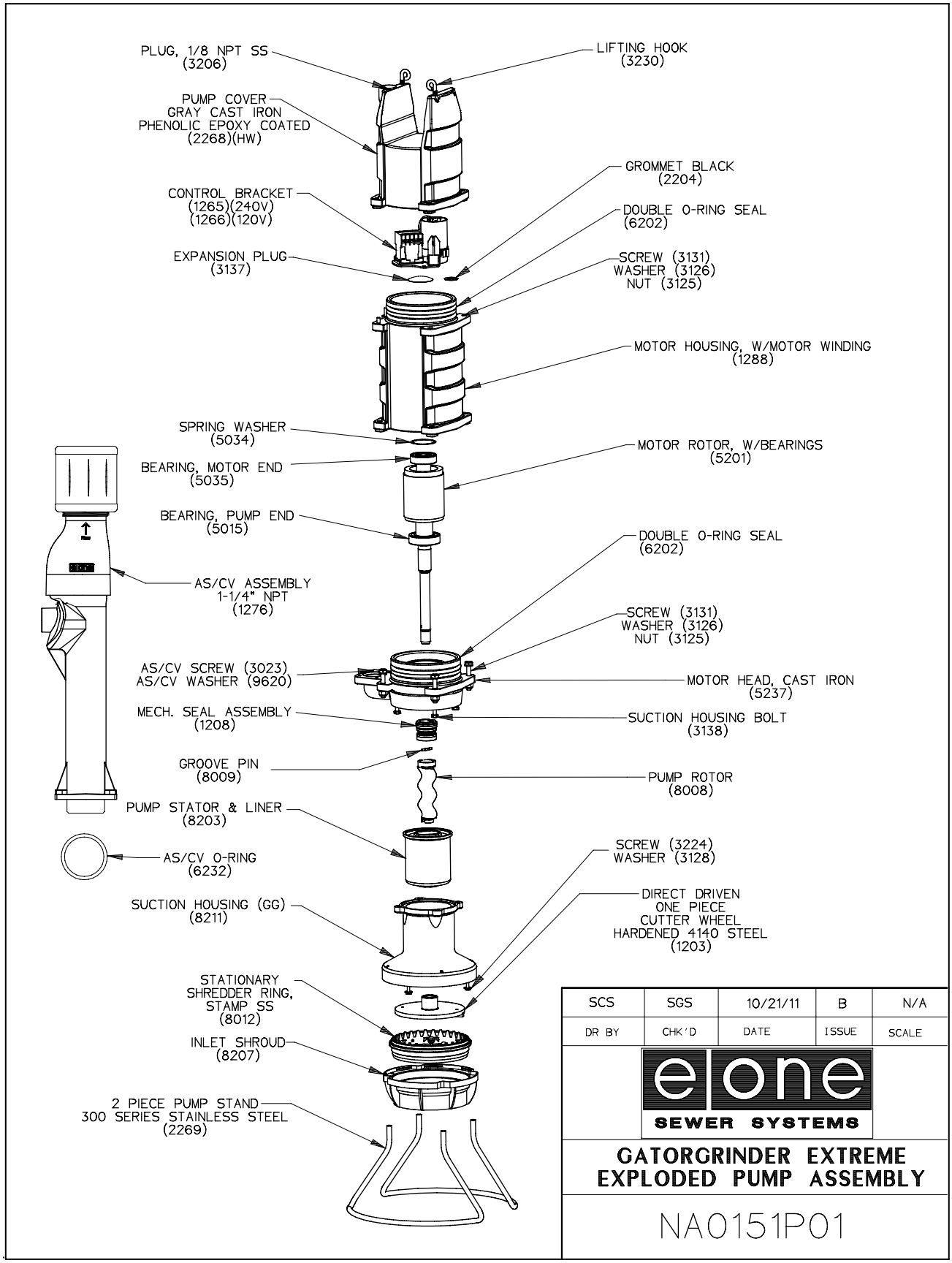

Figure 5-9d, IH091 Pump, Exploded View

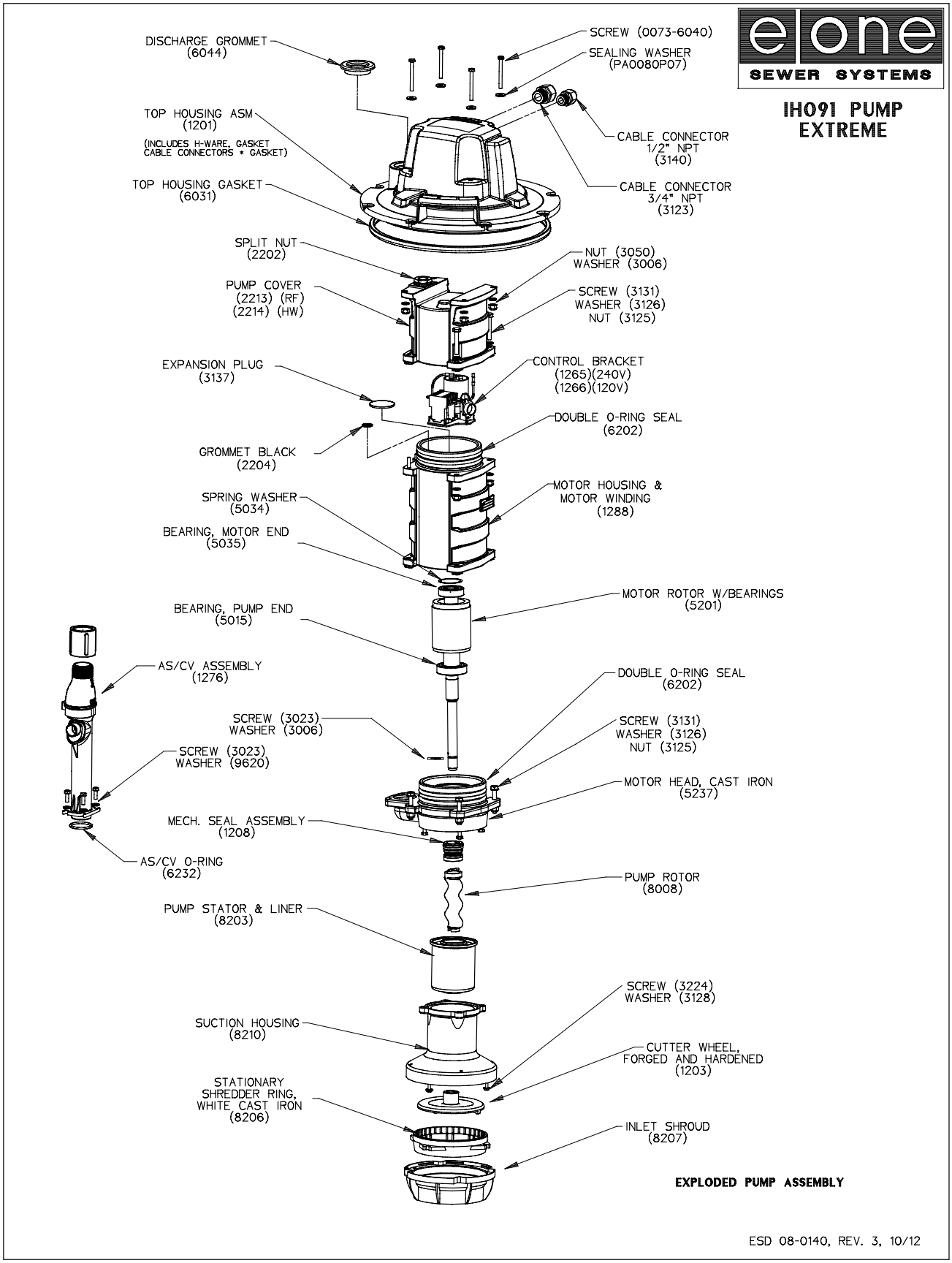

Chapter 6 — Electrical Quick Disconnect (EQD)

Note: *Do not use Teflon paste on the cord grip threads that screw into the EQD housing.*

Disassembling the EQD

1. Loosen the compression nut on the cable fitting.

Figure 6-1

2. Loosen the four screws that hold the insert in the EQD housing.

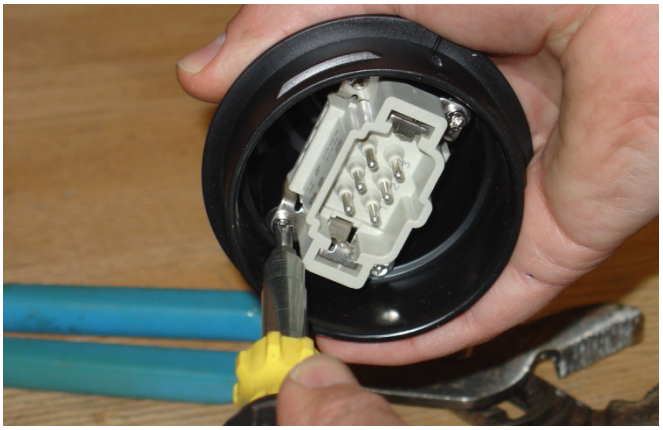

Figure 6-2

3. Slide the EQD housing down the power cable.

4. Loosen the six retaining screws and remove the wires from the EQD insert.

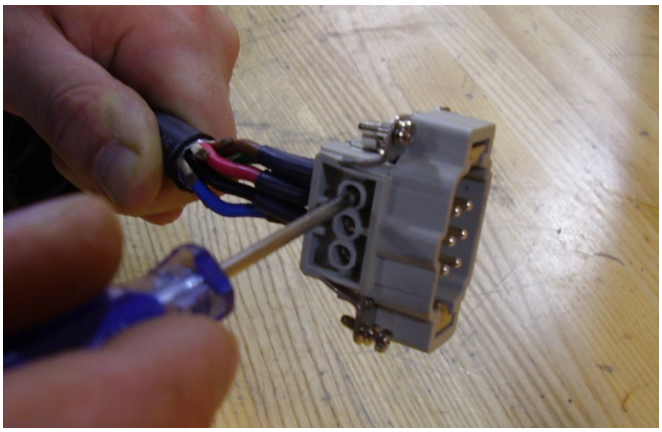

Figure 6-3

Reassembling the EQD

1. Slide the EQD housing (with cable fitting installed and compression nut loose) over the power cable.
2. Tray cable side: install the watertight grommet onto the wires. Keep the tapered side toward the cable jacket, not the cable end.

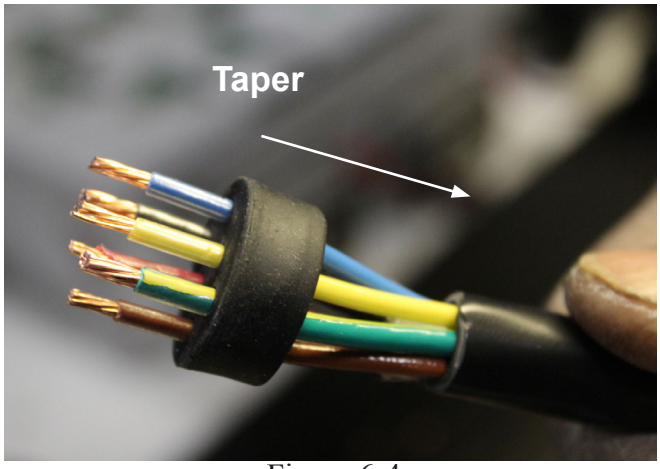

Figure 6-4

3. Insert the wire ends of the power cable into the EQD insert, ensuring proper pin number and wire color alignment:

EQD Pin #	Wire Color	Function
1	Brown	Manual run
2	Red	L1
3	Black	L2 (240V) or Neutral (120V)
4	Green w/ yellow stripe	Ground
5	Yellow	Alarm power feed
6	Blue	Alarm power return

Table 6–1

4. Tighten the six setscrews. Ensure the wires have been stripped back 1/4” to 3/8” for proper installation.
5. Tighten the four connector screws into the EQD housing.

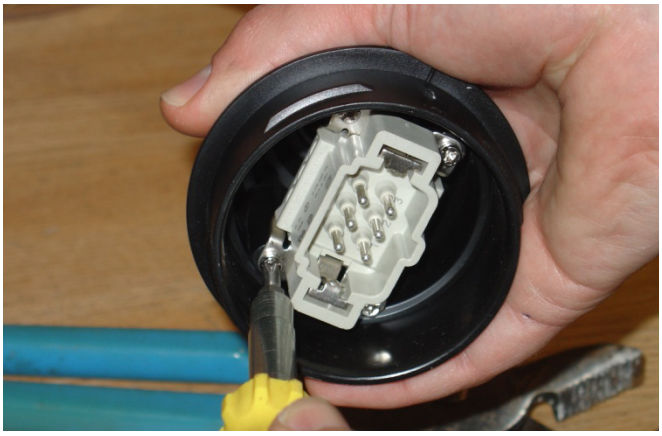

Figure 6-5

6. Tighten the compression nut on the cord grip.

Figure 6-6

EQD Retrofit: 2000 Series to Extreme Series

1. To seal the core bolt inserts in the tank transition, install the six foam pads onto the underside of the new top housing. Flats on the underside will guide you.
2. With the power off, loosen the screws on both sides of the 2000 Series EQD. Unplug the EQD.
3. Remove the four screws at each corner of the insert. Loosen the packing nut and push the cable through the housing.
4. Disconnect the six leads from the insert by loosening the set screws.
5. Cut off the old, stripped portion of the cable.
6. Slip off the old EQD housing and compression fitting from the cable.

7. Slip the Extreme Series EQD housing with new compression fitting installed over the cable. **Do not use pipe sealant on the compression fitting threads — damage will result!**
8. Trim the outer jacket back by 2 1/4 inches. Strip the six individual wire leads 1/4 inch to 3/8 inch. These stripped lengths must be followed closely to ensure the proper installation.
9. Install the water block grommet over the six conductors, inserting the wires into the numbered side (Fig. 6-4).
10. Connect the individual wires to the electrical insert as indicated:

EQD Pin #	2000 Series Wire Color	Extreme Series Wire Color	Function
1	Red	Brown	Manual run
2	Black	Red	L1
3	White	Black	L2 (240V) or Neutral (120V)
4	Green	Green w/ yellow stripe	Ground
5	Orange	Yellow	Alarm power feed
6	Blue	Blue	Alarm power return

Table 6–2

11. Tighten the set screws.
12. Slip the EQD housing down to the electrical insert.
13. Tighten the four corner screws, compressing the water block grommet into housing (Fig. 6-5). Be sure to start each screw before tightening completely.
14. Tighten the compression fitting packing nut (Fig. 6-6).

EQD Retrofit: 200 Series to Extreme Series

Order the permanent conversion kit (ND0059G01) and follow the enclosed instructions.

Chapter 7 — Top Housing

D-Series Top Housing Removal

1. Loosen the candy cane compression nut and slide the candy cane away from the check valve/anti-siphon.

Figure 7-1

2. Loosen and remove the four top housing bolts.

Figure 7-2

3. Spray the power cable and Equalizer tube with soapy water and lift off the top housing from the top of the control compartment. Simultaneously slide the power cable and Equalizer tube through the grommets.
4. Continue to the next section if the top housing will be replaced.

Discharge (Candy Cane) Removal

1. Remove the O-rings from the discharge tube.

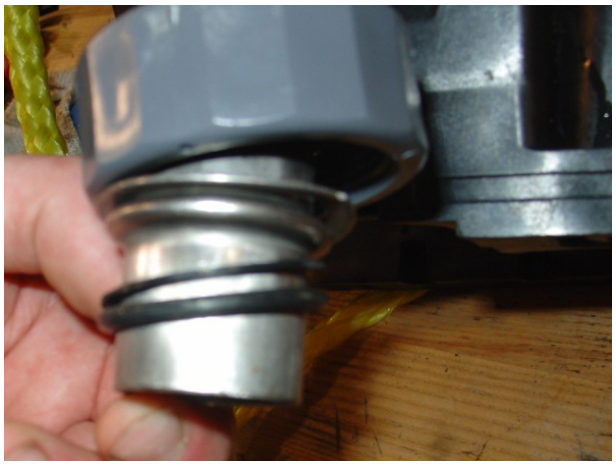

Figure 7-3

2. Bend and remove the split washer.

Figure 7-4

3. Remove the compression nut by positioning it at an angle and knocking it off using a plastic or rubber mallet.

Figure 7-5

4. Remove the discharge tube from the top housing.
5. Remove the cable clips that hold the Equalizer tube and power cable together and separate the two.
6. Remove the EQD assembly as described in *Chapter 6 – EQD* and pull the Equalizer tube and power cable through the top housing.

D-Series Top Housing Reassembly and Installation

1. Remove the power cable and Equalizer tube grommets from the top housing. Push a fish tape, rope or solid wire through the hole.

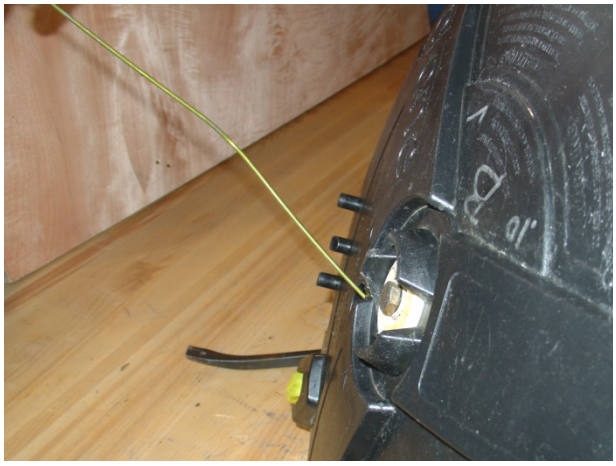

Figure 7-6

2. Attach the power cable (EQD end) to the guide wire with tape. Pull the cable through the top housing. Repeat for the Equalizer tube.

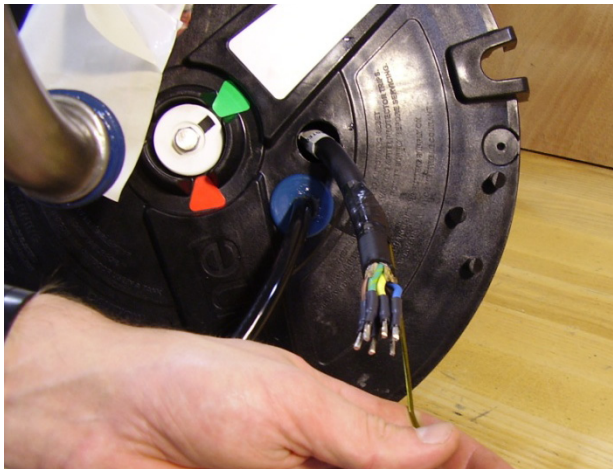

Figure 7-7

3. Using soapy water as a lubricant, slide the grommets back onto the power cable and Equalizer tube.

4. Use a small, flat head screwdriver to seat the power cable and Equalizer tube grommets into the top housing. Take care not to tear the grommet.

Figure 7-8

5. Secure the top housing onto the control compartment casting with the four bolts and four new Nyloc nuts. Tighten in an X pattern to 120 inlb.

IH Station Top Housing Removal

1. Remove the four bolts that attach the check valve/anti-siphon to the discharge elbow.

Figure 7-9

2. Loosen and remove the four top housing bolts.

Figure 7-10

3. Remove power cable/Equalizer tube restraint and separate the two.

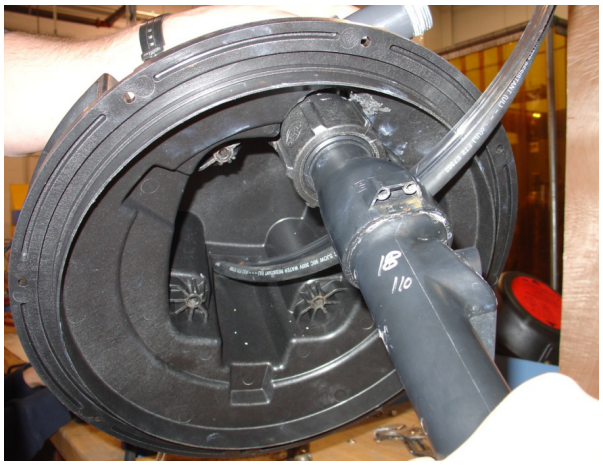

Figure 7-11

4. Lift the top housing and anti-siphon/check valve off the top of control compartment as one assembly.
5. Simultaneously slide the cable and Equalizer hose through the cord grips to loosen the compression nuts.

IH Station Top Housing Replacement

1. Unthread the check valve/anti-siphon from the PVC discharge elbow.
2. Disconnect the power cable from the alarm panel.
3. Unplug the Equalizer tube from the Equalizer.
4. Remove the retaining clips from the Equalizer tube and power cable and separate the two.
5. Slide the remaining Equalizer tube and power cable through the top housing.
6. Remove the cord grips and grommet from top housing (discharge, Equalizer tube and power cable).

IH Station Top Housing Reassembly and Installation

1. Install the discharge grommet into top housing.
2. Install the discharge elbow into discharge grommet.
3. Thread the discharge elbow onto check valve/anti-siphon and tighten, making sure to align with the guide slots toward the inside of the top housing.
4. Reattach the Equalizer tube to the barbed fitting on the level sensor.
5. Install the cord grips for power cable and Equalizer tube.
6. Push the power cable and Equalizer tube through their respective cord grips, starting from the bottom of the top housing.
7. Pull the Equalizer tube and power cable through the cord grips while installing the top housing and aligning the check valve/anti-siphon onto the two retaining pins.
8. Tighten the cord grip compression nuts.

9. Install and secure the four top housing bolts with four new Nyloc nuts and tighten in an X pattern.
10. Install the four bolts and secure the check valve/anti-siphon to the discharge elbow.
11. Reconnect the power cable to the alarm panel.
12. Re-install the Equalizer.
13. Secure the Equalizer tube to the power cable with the retaining clips.

Cable Replacement

Cable Removal

1. Remove top housing, following the appropriate instructions for top housing removal and replacement above.
2. Remove the level sensor as described in *Chapter 8 – Level Sensor*.
3. Remove the split ring compression nut from the control housing.

Figure 7-12

4. Remove the control housing as described in *Chapter 9 – Control Cavity*.
5. Disassemble the level sensor as described in *Chapter 8 – Level Sensor*.

Cable Installation

1. Ensure the threads in the control housing are clean and free of debris. Using a M32 x 1.5 bottom tap (PT# 4209) will ensure that the threads are clean.
2. Apply Loctite 598 generously to the bottom of the strain relief over-mold and insert the wires through the cable entry.

Figure 7-13

Figure 7-14

3. While inserting the cable into the control housing, spread Loctite 598 onto the threads of the cable entry until they are coated completely. Install a new split nut onto the cable.

Figure 7-15

Figure 7-16

4. Tighten the split nut while ensuring that the level sensor portion of the cable is pointed toward the opposite side of the cable entry area. Wipe off any excess Loctite 598 that may have squeezed out.

5. To wire the controls, refer to *Chapter 9 – Control Cavity*.
6. Reassemble the control housing back on the motor housing as described in *Chapter 9 – Control Cavity*.
7. Air test the control compartment as described in *Chapter 12 – Final Test Procedures*.
8. Connect the wires to the level sensor and reassemble as described in *Chapter 8 – Level Sensor*.
9. Perform the level sensor pressure test as described in *Chapter 8 – Level Sensor*.
10. Connect the EQD to the cable as described in *Chapter 6 – EQD*.

Chapter 8 — Level Sensor

Note: *NEVER use Teflon paste on the threads of the cord grip (power cable) or the threads of the barbed fitting (Equalizer tube) that are connected to the top of the level sensor (or any plastic part on the pump) because damage could occur! Use only Loctite 598 on the threaded portions!*

Level Sensor Removal

1. Refer to *Chapter 7 – Top Housing* to remove the top housing from D-Series and IH pumps.
2. For W-Series, Gatorgrinder and Upgrade pumps, loosen the two rope hooks and move them out of the way of the level sensor.
3. Disconnect one side of each of the level sensor retaining clips. Separate the columns and push upward to remove the level sensor.

Figure 8-1

Figure 8-2

Level Sensor Test Procedure

The level sensor assembly must be leak tested before disassembly and after reassembly.

The following tools are needed to perform the level sensor test: 1) digital Monometer; 2) isolation valve with a T or Y fitting; 3) hand pump or regulated air source; 4) stop watch; and 5) three pieces of tubing. These items are available in E/One kit #NB0158G01.

Figure 8-3

1. The configuration above is a field or shop configuration. You can also use a regulated air source into tube #1 for a shop configuration.
2. Connect the three pieces of tubing to the pump or regulated air source, the monometer and the level sensor assembly in the configuration shown above.
3. Pressurize the level sensor assembly to 82 inches to 90 inches of water column in air (approximately 3 psi).
4. Close the isolation valve.
5. After 40 seconds, record the monometer reading.
6. After another 30 seconds, record the monometer reading again.
7. Subtract the last reading from the first reading.

The results must be no more than 0.5 inch of loss for hardwired assemblies manufactured before 8/25/2009 or serial number 353742 and no more than .01 inch for units manufactured after 8/25/2009 or serial number 353742.

Level Sensor Leak Troubleshooting & Repair

If a substandard result occurs, perform the following procedure to determine where the leak is occurring and where to repair the level sensor assembly.

1. While the assembly is under pressure (82 inches to 90 inches of water in air), spray soapy water or leak detector around the liquid tight cord grip, the Equalizer tube, the barbed fitting, the joint between the two assembly halves, the cable and T portion of the over-mold, and the test assembly.
2. Lay the assembly on its side and spray around the column holes in the bell area.
3. Make any necessary repairs and retest the level sensor assembly.
4. Snip off 1/2 inch of the tubing to ensure a good seal. Reinstall the Equalizer tube onto the barbed fitting.

Level Sensor Disassembly

1. Loosen the four Phillips head screws that hold the level sensor assembly together (Fig. 8-4). Separate the two columns (Fig. 8-5).

Figure 8-4

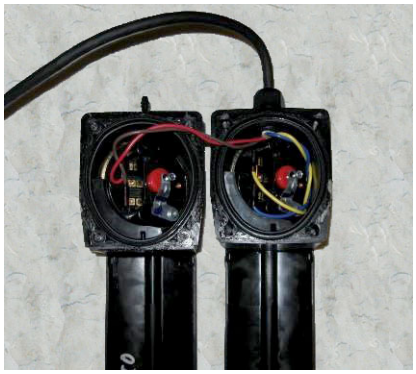

Figure 8-5

2. Using needlenose pliers, remove the pressure switch retainers from both sides of level sensor (Fig. 8-6). Remove the flag terminals from the switches (Fig. 8-7).

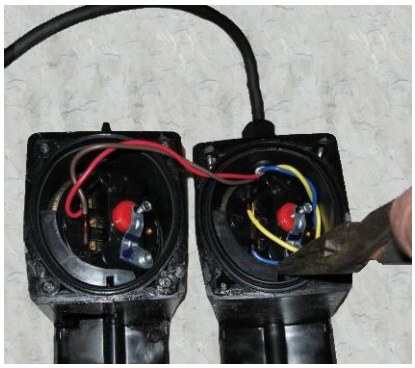

Figure 8-6

Figure 8-7

3. Remove the on/off switch (Fig. 8-8) and the molded radial seal (Fig. 8-9). ***Note:*** *The seal will also stick in the alarm side.*

Figure 8-8

Figure 8-9

4. Clip the flag terminals from the wires, loosen the cord grip compression nut and pull out the cable (Fig. 8-10). Remove the alarm switch (Fig. 8-11).

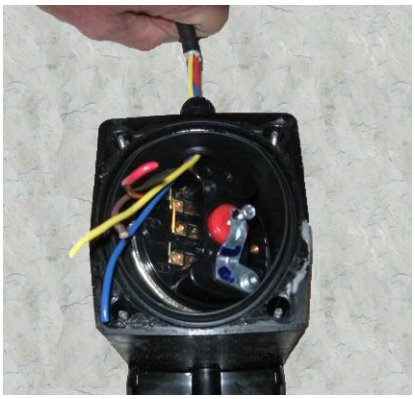

Figure 8-10

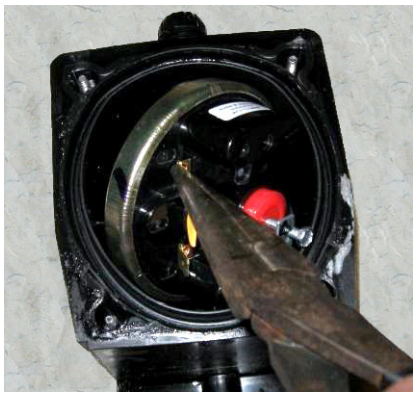

Figure 8-11

Column Leak Test

1. Cover the column hole in the switch compartment with your thumb.

Figure 8-12

2. Submerge the side of the level sensor assembly that you are testing into a container of water that is deep enough (at least 19 inches) to submerge it up to the top of the column at the switch compartment.
3. Look for bubbles coming out of the column.

Figure 8-13

Level Sensor Reassembly

Ensure that the inside of the two level sensor halves and the seal rim are clean and dry before reassembly.

Note: *If you are using a cordless drill or screwdriver, use one of the lowest torque settings or damage may occur.*

1. If the barbed fitting or liquid tight cord grip is being replaced, put a fine bead of Loctite 598 on the threads before installing them into the assembly.

Figure 8-14

Figure 8-15

2. Using Dow 111 grease, lubricate the O-rings on the new switches (Fig. 8-16) and install them (On/Off switch in the Equalizer barbed fitting side and the Alarm switch in the cable entry side). Install a new molded radial seal on the On/Off side and lubricate the exposed surface (Fig. 8-17).

Figure 8-16

Figure 8-17

3. Feed the cable through the cord grip (Fig. 8-18), reinstall the compression nut and tighten (Fig. 8-19).

Figure 8-18

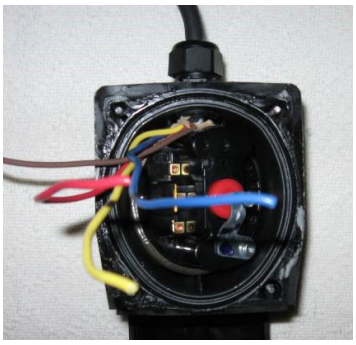

Figure 8-19

4. Install new flag terminals (PT# 7115) and reconnect the wires: (On/Off) Red to Pin 1 and Brown to Pin 3; (Alarm) Yellow to Pin 1 and Blue to Pin 3. ***Note:*** *Flag terminals must be crimped using a flag terminal crimper (PT# NA0237P01 or equivalent).* Reinstall the switch retainers.

5. Mate the two halves together, ensuring that wires are not in the way. Install the four screws, taking care not to overtighten (Fig. 8-21). Perform the level sensor test procedure.

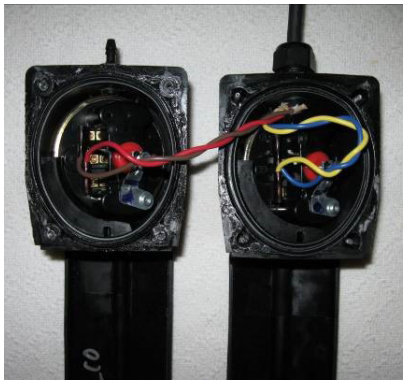

Figure 8-20

Figure 8-21

Equalizer Field Reset — Original Style (May 2012 & Earlier)

Note: *Environment One does not recommend opening the original-style Equalizer. This Equalizer design was used until May 2012, pump serial number 439086.*

If the Equalizer diaphragm appears to have collapsed, disconnect the Equalizer tube from the Equalizer. If the problem goes away, inspect the Equalizer diaphragm. If the problem persists, the Equalizer diaphragm likely has not collapsed. If the Equalizer diaphragm has collapsed, perform the following procedure to reset the diaphragm.

1. Using your fingers, carefully pry apart the Equalizer at the snaps. Do not use a screwdriver or any other tool. If the Equalizer will not pry apart, install a new Equalizer.

Figure 8-22

2. Remove the collapsed diaphragm, clean and dry it, and reshape it to the neutral position.

Figure 8-23

Figure 8-24

3. Align the mold number on the diaphragm to the hanger on the base. Install the diaphragm onto the base shell and ensure that it is seated completely.

Figure 8-25

Figure 8-26

4. With the logo upright, set the cover on the base evenly and center the cover snap to the base hanger. Press the cover only until the snaps engage or damage may occur. Inspect all four snaps to ensure that they are fully engaged.

Figure 8-27

Equalizer Field Reset — New Style (May 2012 to Present)

Note: *This Equalizer design changed in May 2012, pump serial number 439086.*

If the Equalizer diaphragm appears to have collapsed, disconnect the Equalizer tube from the Equalizer. If the problem goes away, inspect the Equalizer diaphragm. If the problem persists, the Equalizer diaphragm likely has not collapsed. If the Equalizer diaphragm has collapsed, perform the following procedure to reset the diaphragm.

1. Use a medium-sized screwdriver to gently pry the inspection cover from the front of the Equalizer.

Figure 8-28

Figure 8-29

2. Remove the Equalizer tube. Grab the diaphragm of the Equalizer and withdraw it slowly.

Figure 8-30

Figure 8-31

3. Push the diaphragm back into its neutral position and look for signs of water coming out of the nipple attached to the Equalizer tube. If water is present, inspect the level sensor assembly switch compartment.

Figure 8-32

Figure 8-33

4. Snap the inspection cover back into place on the front of the Equalizer assembly and reattach the Equalizer tube.

Figure 8-34

Figure 8-35, Level Sensor Assembly Exploded View (all hardwired pumps)

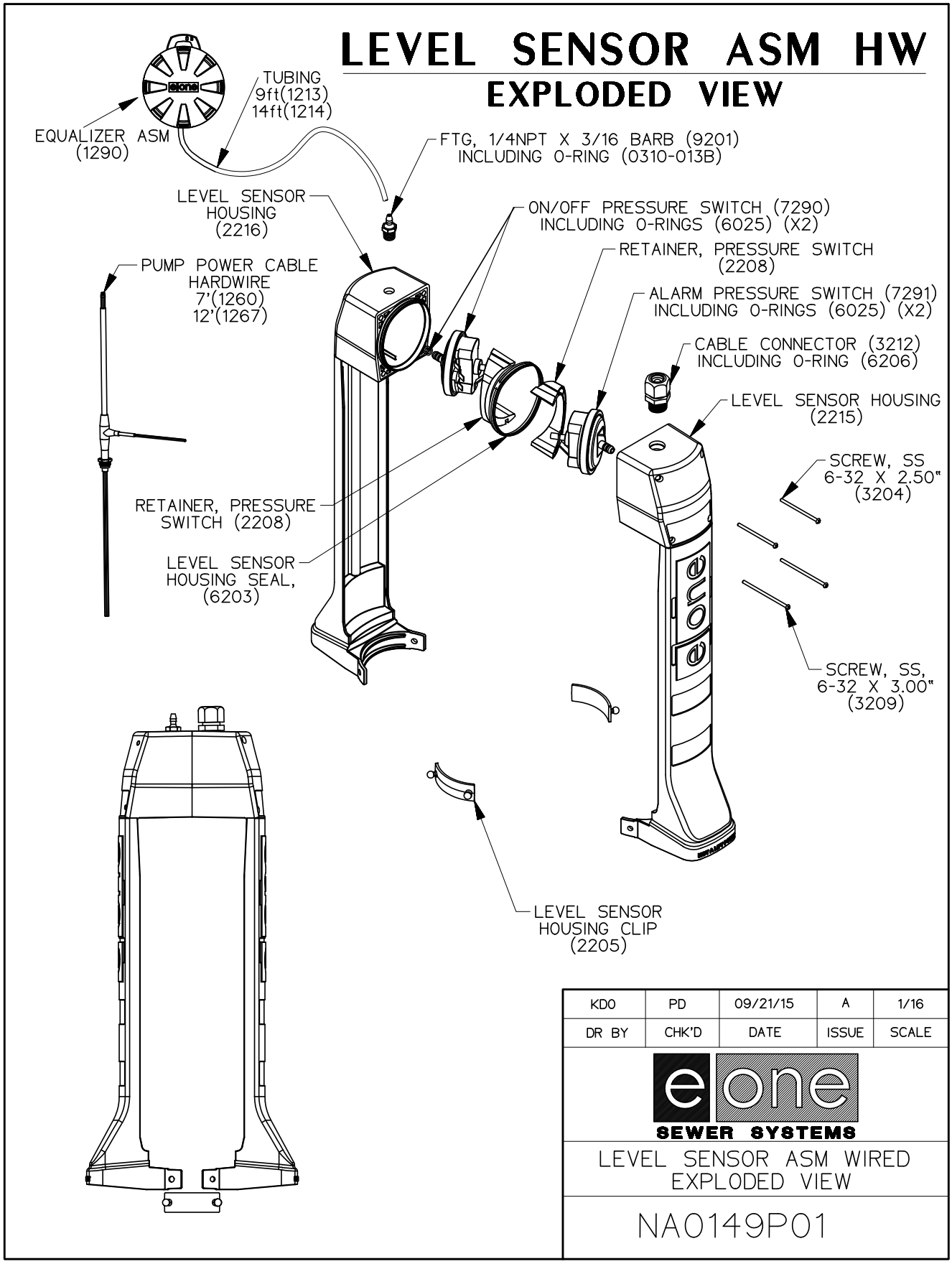

Chapter 9 — Control Cavity

Removing the Control Housing

1. Remove the top housing and level sensors as described in *Chapter 7 – Top Housing* and *Chapter 8 – Level Sensor*, respectively.
2. Loosen and remove the air release plug using a 3/16-inch hex key.

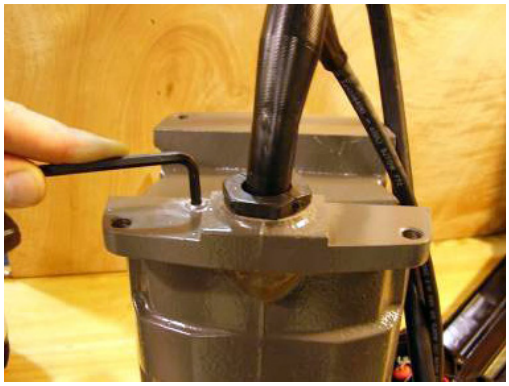

Figure 9-1

3. Install the control cavity air test fitting and use a regulated low pressure line or hand pump to pressurize the control cavity to 5 psi.
4. Use soapy water to test for leaks around the O-ring joint and compression nut. Submerging the assembly may aid with finding leaks. Clearing trapped air may take several minutes.
5. Use a 1/2-inch deep-well socket and a 1/2-inch wrench to remove the three retaining bolts from the control housing.

Figure 9-2

6. Break the seal and lift the control housing using two pry bars. Pry upward until the control housing is free, taking caution not to pull the wires apart from the control bracket assembly.

Figure 9-3

7. Hang the control housing on the motor housing by inverting it and hanging it on the guide pin.

Figure 9-4

Motor Contactor and Controls

Inspect the internal components for signs of corrosion, moisture and/or damage. The motor contactor has 10 screw-type terminals that hold leads:

- Terminals A1 and A2 are the coil
- Terminals 1/L1, 3/L2, and 5/L3 are the line side of the contacts
- Terminals 2/T1, 4/T2 and 6/T3 are the load side of the contacts

When the on/off switch or manual run energizes the coil, the contacts close and run the pump.

To test motor contactor operation:

1. With the power off, verify that the control bracket is wired correctly and is seated properly into the motor housing.
2. Check the continuity across 1/L1 and 2/T1; across 3/L2 and 4/T2; and 5/L3 and 6/T3. If they read “closed” (000 or short), replace the contactor. If they read “open” (1 or OL), proceed.
3. Connect a jumper wire from A2 (coil) to 1/L1 (contact).
4. Plug the pump into a power source. Check nameplate for proper voltage.
5. Turn the power on. The contactor should engage and transfer L1 power to the motor. If the pump does not run, check the voltage across the contacts, the start components and the motor windings.

Motor Start Switch

The control bracket must be removed in order to access the start switch. The motor start switch is mounted to the control bracket and has three spade terminals.

Terminals 1 and 3 are attached to a coil; a reed switch runs inside the coil. When the pump motor is energized, a magnetic field is created that engages and disengages the start winding. Terminal 2 energizes the start winding through the capacitor.

Note: *The control bracket must be removed to access the start switch.*

Removing the Control Bracket

1. Remove the red wire from 1/L1.
2. For pumps with serial numbers prior to 531884 (May 2015), remove the black wires from A1. For pumps with serial numbers after 531884, remove the black wires from 3L2.
3. Remove the brown wire from A2.
4. Use a hex wrench to remove the two retaining screws.
5. Remove the red wire from the capacitor.
6. Remove the yellow and grey wires from the start switch.
7. Remove the blue motor winding wire from 2/T1.
8. Cut the black wire between the motor and thermal at the butt splice.

To test the switch:

1. Remove the orange wire from the capacitor before testing.
2. Connect a continuity tester between Terminals 1 and 3. It should read a short or closed circuit; if not, replace the switch.
3. Connect the tester between Terminals 1 and 2 or Terminals 3 and 2. It should read an open circuit; if not, replace the switch.

Motor Capacitor

The motor capacitor is located in the center of the control bracket and has two terminals. Located across the two terminals is a bleeding resistor that bleeds off any unused, stored current. One terminal runs to the start switch; the other connects to the motor start winding. The capacitor gives the motor a voltage boost while starting.

To test the capacitor:

1. Hold the insulated handle of a screwdriver and short the two terminals to bleed off any remaining current.
2. Use a continuity tester to check between the two terminals. It should show a short and slowly bleed off. If not, reverse the leads. If there is still no reading or the reading does not bleed off, replace the capacitor.

Note: *The motor capacitor may also be tested by checking for proper Microfarad reading.*

Thermal Protector

The thermal protector keeps the motor from running too long above its rated amperage, preventing possible motor or pump damage. This is an auto-reset switch; two wires are permanently attached to the protector on the normally closed contacts.

A second thermal is wound into the windings of the motor and protects the motor from overheating. If the motor goes above the preset limits, the thermal protector will cut the power to the pump until it cools down. Both thermal switches will reset themselves automatically.

The motor thermal switch is not replaceable.

Pump Cable Meg Check

- Good: 500M or higher
- Marginal: Between 200M & 500M
- Bad: Below 200M

1. With the control bracket removed and no wires touching the chassis or each other, meg test at the EQD between each pin.
2. If you get bad readings, remove the EQD plug insert and retest at the wires.
3. If bad readings go away, replace the insert and retest at the pins.
4. If bad readings persist, replace the cable.

Note: *This test is performed with the switches still connected, assuming that they are good. If the level sensor assembly has not been entered and you get bad readings, see* Chapter 8 – Level Sensor.

Motor Cavity Water Test

1. With the controls removed, remove the ground screw and install the air test fitting.
2. Pressurize the compartment to 5 psi.
3. Turn the assembly upside down and remove the hose from the test fitting. Look for water escaping from the motor cavity. If water is noted, the motor will need new bearings and the windings will need to be cleaned, dried and tested.

Motor Windings Test

Perform motor winding resistance checks per the following charts to verify motor condition.

Note: *While all of the wires are disconnected between the control bracket and the power cable, replace the two O-rings on the motor casting before rewiring the controls. Use Molycote 55 grease on the motor housing and the motor head O-rings. Use silicone grease on all other O-rings.*

Motor Field Winding Resistance

Meter Setting	Wire Combination	Good Motor Resistance	Bad Motor Resistance
200	Black/Red	1.5 – 2.5 ohms	Infinity
200	Black/Gray	1.5 – 2.5 ohms	Infinity
200	Yellow/Blue	1.5 – 2.5 ohms	Infinity
200	Yellow/Black	Infinity	Any reading
2000K or 2M	Ground/All motor leads	Infinity	Any reading; possibly water in motor. Dry windings and retest.
Megger	Ground/All motor leads	500M or higher	Below 500M

Table 9–1

Motor Wire Functions

Wire Color	Function
Black	Run/Start windings and internal thermal protector
Blue	Run windings
Gray	Run windings
Yellow	Run windings
Red	Run windings
Orange	Jumper lead (120V only)

Table 9–2

Control Bracket Installation — 240V

1. Connect the cable ground wire to the chassis and connect the proper wires to the start switch before installing the bracket.
2. Refer to the wiring road map in *Chapter 2 – Troubleshooting* for the correct wiring configuration.

Control Bracket Installation — 120V

1. Connect the cable ground wire to the chassis and connect the proper wires to the start switch before installing the bracket.
2. Refer to the wiring road map in *Chapter 2 – Troubleshooting* for the correct wiring configuration.

Control Housing Installation

1. Unhook the control housing from the motor housing.
2. Slide the control housing back onto the motor housing, making sure not to pinch or crimp any of the wires. The air release plug must be removed in order to install the control housing onto the motor housing.
3. Reinstall the three bolts and use three new Nyloc nuts to secure the control housing.
4. Perform the control cavity leak test as described in *Chapter 12 – Final Test Procedures*.
5. Apply Loctite 598 generously to the threads of the air release plug and install it. Apply Loctite 598 over the plug after it is installed; apply more Loctite 598 if necessary to cover the plug.
6. Reinstall the top housing as described in *Chapter 7 – Top Housing*.

Figure 9-5

Figure 9-6

Chapter 10 — Motor Cavity

A defective or shorted motor; worn seal or bearings; or flooded motor require major repair. Major repairs must be performed in a shop that is equipped with the correct tools and clean facilities for proper repair and testing. Any time a pump is rebuilt, all seals, O-rings, gaskets, bearings, pump stator and pump liner should be replaced. Clean the core thoroughly before performing any major repair.

Core and Motor Disassembly

1. Remove the top housing, level sensors and controls as described in *Chapter 7 – Top Housing; Chapter 8 – Level Sensor*; and *Chapter 9 – Control Cavity*, respectively.
2. Remove the anti-siphon valve by removing the four bolts and lifting it off the discharge elbow.
3. Disassemble the pump end as described in *Chapter 5 – Pump End*. Leave the rotor installed.
4. Use a 1/2-inch deep-well socket and a 1/2-inch wrench to remove the four bolts that hold the motor housing to the motor head.
5. Turn the pump assembly upside down on a bench. Take care not to pinch the motor wires between the motor casting and the work surface.
6. Use two pry bars to remove the motor head from the motor housing.

Figure 10-1

7. After the two castings separate, lift the motor head assembly out of the motor by the shaft.

Figure 10-2

Figure 10-3

Note: *If the upper bearing remains in the motor bearing bore, the freeze plug will have to be removed and the bearing punched out. A new freeze plug will need to be installed.*

8. Remove the pump rotor. Support both ends with wooden blocks to avoid bending the armature shaft. Use a hammer and a 1/8-inch punch to remove the grooved pin that retains the pump rotor.

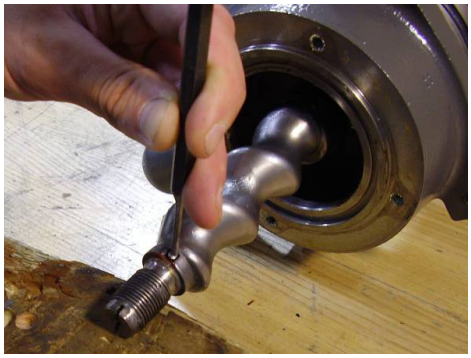

Figure 10-4

9. Remove the armature shaft from the motor head. Hold the armature assembly from the upper bearing and tap the cutter wheel end of the shaft on a piece of 4x4 block. The motor head will drop off the lower bearing and land on the 4x4 block.

Note: *If the lower bearing remains in the motor head bearing bore, it will need to be punched out.*

10. Remove and discard the old bearings.
11. Remove and discard the old mechanical seal from the motor head.

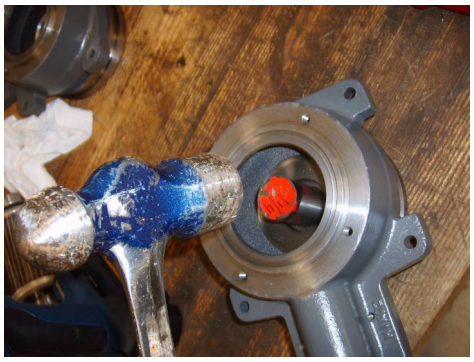

Figure 10-5

Motor Drying Techniques

Note: *If the motor was wet or flooded, clean and dry the motor before reassembling the unit. Use a mild detergent, such as household dishwashing liquid, to clean the motor. Soft brushes can be used with caution; take care not to damage the insulation on the windings. Inspect the windings for varnish flaking off as a result of overheating. Look for burn marks in the windings and in the plastic insulators inside the motor field.*

Several methods can be used to dry the motor. Optimally, bring the temperature of the motor above water boiling temperature (212 F or 100 C) for about two hours. Dry the motor in an oven at 250 F for 2 hours. Alternately, bring the motor above room temperature for a longer period of time (4 hours or more) so the moisture evaporates.

Note: *Do not get any of the devices described below too close to the opening of the motor castings or damage could occur. Temperatures above 311 F will damage the windings insulation.*

- Hang a heat lamp with a 300 watt bulb 1 foot from the opening of the motor casting and dry for at least 4 hours.
- Lay the casting down and put a space heater that has a fan about 1 foot from the opening of the motor casting and dry for at least 4 hours.
- Use a heat gun with a stand and place it no closer than 1 foot from the opening of the motor casting and dry for at least 4 hours.
- Use a hair dryer on a stand and place it no closer than 1 foot from the opening of the motor casting and dry for at least 4 hours.
- If it is a warm, sunny day, place it directly in the sun on the pavement for a day.

1. After the motor is clean, dry and cooled, test the motor windings resistance. Refer to Table 9-1, Motor Field Winding Resistance, in *Chapter 9 – Control Cavity*.
2. Meg the windings to Ground. Readings should be 500M to 1000M at 500 volts.

Note: *If the motor winding has failed, it does not need to be removed. The new assembly (PT# 1288) contains a winding installed into a motor housing.*

Assembling the Core and Motor

1. Clean all machined surfaces including the motor head, motor housing, bearing bores, and seal bore. Surfaces must be clean and free of rust.
2. Press the new upper and lower bearings onto the armature shaft.
3. Set the motor head on the suction housing or place on a bench with a hole for the armature shaft to penetrate. Install new radial seals and lubricate with Molycote 55.

Figure 10-6

4. Apply Loctite 641 to **either** the upper and lower bearings **or** to the bearing bores. Use a sponge tip or nozzle tip applicator to apply a thin, even coat around the entire surface (Figure 10-7).

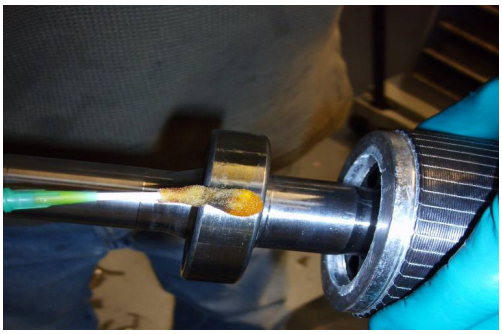

Figure 10-7

Figure 10-8

Note: *If you are applying Loctite 641 to the bearing race, apply it to the portion of the race that will enter the bearing bore first. If you are applying Loctite 641 to the bearing bore, apply it to the area of the bore that will come into contact with the bearing race first when it is being installed (Figure 10-8).*

5. Install the armature assembly into the motor head.

Figure 10-9

6. With the motor housing upside down on the bench, place the spring washer into the top bearing bore. Lift the motor head/armature assembly by the motor head. Grasp the armature shaft below the motor head and turn it upside down. Carefully slide the assembly into the motor housing, ensuring that the discharge elbow is aligned on the appropriate side. Tighten the bolts and four new locknuts evenly in a cross pattern to 140 inlb.

Figure 10-10

7. Assemble the mechanical seal as described in *Chapter 11 – Mechanical Seal Assembly*.

8. Perform motor cavity air tests as described in *Chapter 12 – Final Tests Procedures*.

Chapter 11 — Mechanical Seal Assembly

The mechanical seal is a carbon/ceramic type with spring bellows. The seal kit (PT# 1208) consists of the ceramic portion, carbon portion/spring bellows, Pac–Ease, instruction sheet, seven lock nuts and four main sealing O-rings. The seal is easily installed with the motor turned upside down or lying on its side with the pump end facing the installer.

Replace the mechanical seal only during a motor overhaul. Do not replace the mechanical seal in the field or as routine maintenance. Be sure to install the new motor head and control compartment O-rings when reassembling.

Installing the Mechanical Seal

1. Ensure the pump cavity, seal bore and armature shaft are clean and grit-free. Wash the seal installation tool (PT# 4028) and hands before proceeding. Proceed quickly to prevent the lubrication from drying out; otherwise, a failure may occur.
2. Carefully remove the ceramic portion of the seal from the package. Lubricate the O-ring with Pac-Ease or clean, soapy water, handling the seal by the edges. Do not contaminate the smooth face of the seal.
3. Slide the seal over the armature shaft with the grooved side facing the motor head. Use the seal installation tool to press the ceramic portion of the seal into the seal bore. Do not twist or turn the tool; doing so may cut the O-ring.
4. Lubricate the bellows on the carbon portion/spring bellows portion with Pac-Ease or clean, soapy water. Slide over the armature shaft (carbon face first) and press on with the seal installation tool. Use a steady push and take care not to “slam” the two faces of the seal together.
5. Install the pump rotor immediately. Use channel lock pliers to install the groove pin.
6. Rotate the motor shaft to help seat the seal.
7. Proceed to *Chapter 12 — Final Test Procedures*.

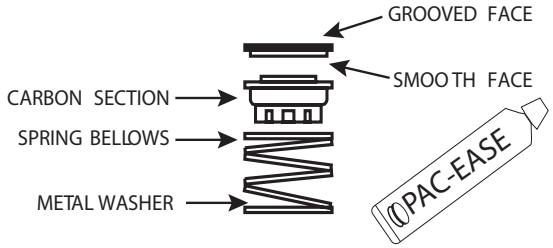

Figure 11-1

Chapter 12 — Final Test Procedures

Leak Tests

Leaks must be repaired before performing other tests or installing the unit for use. Failure to test the unit can result in core flooding or a damaged unit. After leak testing is complete, perform the remaining test procedures.

Motor Cavity & Seal Assembly Leak Test

Perform this test whenever the motor housing or mechanical seal assembly has been disturbed or the controls have flooded. This test will ensure no leaks exist between the motor head and motor housing and between the mechanical seal assembly and the motor cavity.

1. Use a 1/2-inch socket or wrench to remove the check valve/anti-siphon.

Figure 12-1

2. Install the air test fitting into the ground screw hole and the two control bracket screws into their holes.

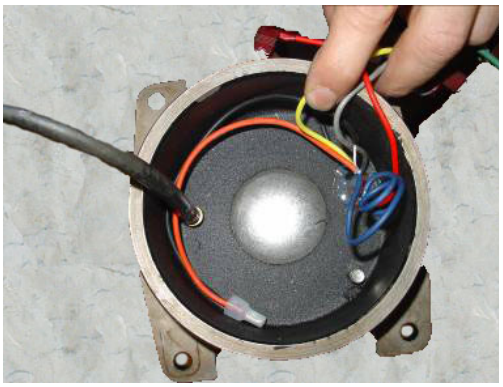

Figure 12-2

3. Place the pump into a 5 gallon bucket. Add enough water to submerge the motor head and discharge elbow.

Figure 12-3

4. Use a regulated low pressure line or hand pump to pressurize the motor cavity to 5 psi and look for bubbles. Bubbles from the discharge elbow indicate a seal leak and bubbles from around the motor head/motor housing joint indicate a motor housing O-ring leak.
5. If this test is being performed on a unit during disassembly, turn the assembly upside down and remove the hose from the test fitting. Look for water escaping from the motor cavity. If water is noted, the motor will need new bearings and the windings will need to be cleaned, dried and tested.
6. Bleed off the air pressure before reassembly.

Control Cavity Leak Test

The pump must be assembled completely in order to perform this test. This test is also performed before disassembly to check for leaks.

1. Use a regulated low pressure line or hand pump to pressurize the motor cavity to 5 psi. Spray soapy water on fittings and joint. Look for bubbles where the control housing and the motor housing join together, and the power cable entry point. Failure to repair leaks will result in premature failure of the unit.

Figure 12-4

2. Remove the test fitting. Apply Loctite 598 generously to the threads of the air release plug and install it. Apply Loctite 598 over the plug after it is installed; apply more, if necessary, to cover the plug.

Test Run

A test tank and panel (available from E/One) are recommended for run-testing the pump. The test tank has a discharge assembly for D-Series pumps, or slide face the W-Series pumps. A pressure gauge and ball valve should be added to operate the pump under pressure. A two-tank setup with sump pump to pump water back to the test tank is ideal. Contact the E/One field service department for assistance. Testing the pump is crucial.

1. Set the pump in the test tank and fill with water to the alarm level. Connect the EQD.
2. Open the discharge valve.
3. Hook the Amp probe around the black power lead to the pump (see Amperage Draw Test).
4. Turn on the alarm power circuit breaker and verify the alarm is functioning.
5. Turn on the pump power circuit breaker. The pump should turn on immediately. At 0 psi, the alarm should turn off in one to two minutes; the pump within 30 to 45 seconds after the alarm.
6. Leave the circuit breakers on. Fill the tank until the pump turns on. Close the ball valve until the pressure gauge reads 40 psi. The pump should shut off in approximately 45 seconds (in a 24-inch diameter tank).
7. Fill the tank again until the pump turns on. Carefully close the ball valve until the gauge reads 35 to 40 psi. The pump should shut off in approximately one minute. The unit must be tested to pump against discharge pressure; note the amperage draw at each pressure.

Note: *The unit pumps approximately 15 gpm at 0 psi discharge pressure; 11 gpm at 40 psi; and approximately 9 gpm 60 psi. Flow can be checked with a 5 gal pail and a stop watch (15 gpm = 20 seconds; 11 gpm = 28 seconds; 9 gpm = 34 seconds)*

WARNING!

Do not “dead head” the pump by closing the valve completely. Damage and personal injury could occur.

Amperage Draw Test

1. Set the clamp on amp meter to the desired scale.
2. Hook the probe around the black power lead in the control panel.
3. With the power on, fill the tank until the pump operates.
4. Read the current directly. Refer to the following table for troubleshooting information.

The figures shown are averages and meant to be used for approximation since motors, voltages and amp meters vary. For a 120-volt pump, double the amperage shown in table.

The table displays a comparison of back pressure (psi), flow (gpm), current draw (amperes) and head (feet of water pressure). By knowing the current draw, you may discover a restricted or blocked discharge line, blown pump stator, high head operation, etc.

A jammed grinder may trip the circuit breaker or cause the overload protector to cycle and this will cause the pump to cycle on and off and finally result in an alarm condition. A torn or worn out pump stator results in a “runs but does not pump” condition and causes an alarm. Current readings with a clamp-on amp meter will show 4.0 to 4.5 amps when the motor is running without a load. Replace the stator and, if necessary, the rotor.

Amperage Draw Readings

Amps @ 240V (120V)	PSI	Head (ft)	GPM	Comments
4.9 (9.8) or less	0	0	0	Worn stator
5.6 (11.2)	10	24	14	Normal
5.8 (11.6)	20	46	13	Normal
6 (12)	30	70	12	Normal
6.2 (12.4)	40	92	11	Normal
6.5 (13)	50	115	10	Normal
6.8 (13.6)	60	138	9	Normal
7.1 (14.2)	70	161	8	Normal
7.4 (14.8)	80	184	7.5	Normal
8+ (16+)	90+	207+	Varies	Plugged discharge line or bad bearings
>15 (>30)	0	0	0	Jammed grinder or shorted motor

Table 12–1

For more information, please contact your local distributor:

A Precision Castparts Company

Environment One Corporation
2773 Balltown Road
Niskayuna, New York USA 12309–1090

Tel: (01) 518.346.6161
Fax: 518.346.6188

www.eone.com

NA0401P01 Rev C
06/16